Valve Technology

A series of articles from 1993 by Graham Dixey C.Eng., MIEE republished by kind permission of Maplin Magazine.

Menu

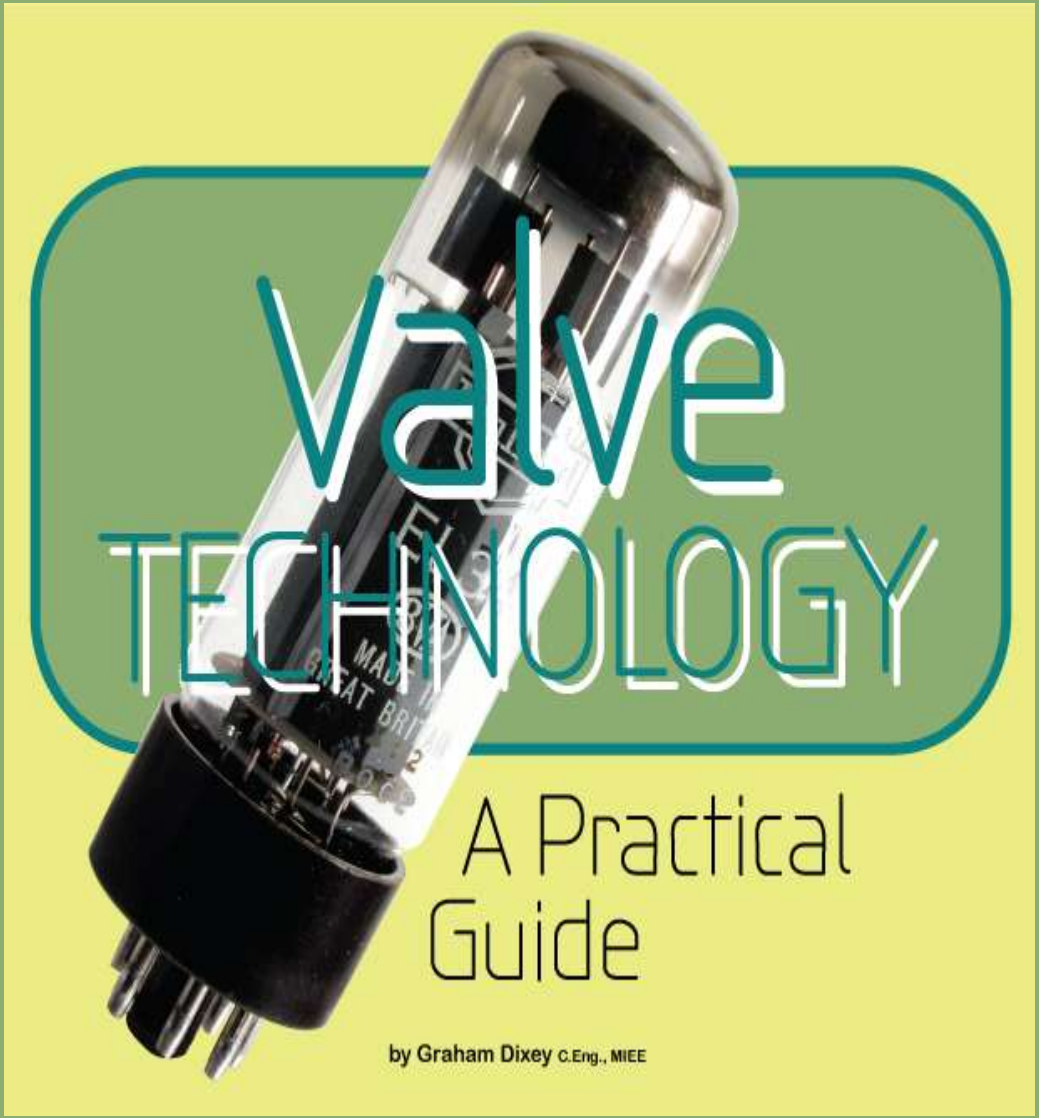

Introduction

It was the invention of the valve and its subsequent development that ushered in the age of electronics, It reigned supreme, for the first half of the 20th century and into the beginning of the second until gradually, at first and then quite rapidly, it was elbowed out by the transistor (the discrete form of this was in turn, largely displaced by the advent of more and more complex integrated circuits).

Virtually every practical application of electronics bowed to the might of the silicon devices. To the average person 'in-the-street', the impact was felt

in the influence of modern electronics on the performance and physical appearance of domestic items, such as TV receivers, radios and Hi-Fi systems, the viability of compact video equipment, in fact the whole way of modem life. Hence, in view of the obvious advantages of solid state electronics – small size, long life and reliability, economy of operation and so on it is perhaps surprising that, in recent years, there has been a resurgence of interest in valves,

This is especially true with regard to their use in Hi-Fi amplifiers, where aficionados claim that they give a better sound than their 'silicon sisters', particularly under overload conditions, and there is more to this than mere Hi-Fi snobbery. It is fair to say though that the current generation of young electronics enthusiasts, amateur or otherwise, having completely missed out on the valve age, might make the mistake of dismissing valves as 'extinct dinosaurs'. Perhaps they might at least like to gain some understanding of the basic principles of the devices themselves and the circuits in which they can be used, even to the extent of wiring them up and having a go (and you can get quite hooked on these fascinating and quaint gadgets). Who knows – you might even find an application where a valve works better than anything else that you have tried! The aim of this series is to satisfy the curiosity of such readers in a way which, it is hoped, will be both informative and entertaining.

In the original typeset article the maths was set out as conventional multi-line. In this HTML version the maths is presented in single line format. To represent an exponent, say ten to the power three ie ten cubed or 1,000 the standard format 10^{-3} is used.

A Little History

The history of the thermionic valve begins in 1883. Thomas Edison, while experimenting with electric lamps, discovered that a current can be made to flow in a vacuum, from the hot filament to a positively charged metal plate also within the bulb. Later, a Professor Fleming investigated this effect further and noticed that, when an alternating voltage was applied between the filament and the metal plate, current only flowed on alternate half-cycles – in other words, rectification was taking place. He took out a patent for this in 1904. Shortly afterwards, a Doctor Lee de Forest found that, by interposing a wire grid between the filament and the plate, the current flow could be controlled. These two devices were known, respectively ,as the diode and the triode, and between them they ushered in the branch of the physical sciences that today we call 'electronics'.

Index to Articles in the Series

Many thanks to Roger Lawson for the loan of the final article so that this series could be complete.

See also **The Original Mullard 5-20 Amplifier, One kW Audio Amplifier and A Low Cost Valve Amplifier.**

Return to Articles Contents Page

Valve Technology - A Practical Guide

A series of articles from 1993 by Graham Dixey C.Eng., MIEE republished by kind permission of Maplin Magazine.

Menu

Electron Emission

But how is it that electrons can be made to move through a vacuum? It begins with the emission of electrons from a material, which occurs when the electrons have gained sufficient energy to escape from the forces binding them to the material. There are several ways in which this can happen, as follows:

1. Thermionic emission
2. Photo-emission
3. Secondary emission
4. Field emission

Of these it is the first, thermionic emission. that is of primary interest in understanding how valves work.

Thermionic Emission

Conduction with in a conducting material consists of the movement of electrons. Electrons are only available for conduction when they acquire sufficient energy to leave the parent atoms. In good conductors the amount of energy required for conduction is relatively small. If the amount of energy applied to the conductor is raised to a sufficiently high level some electrons do more than leave their parent atoms; they leave the surface of the material itself. What is a likely source of this energy? The answer is heat. This can be generated relatively easily for this purpose, as will be seen. When the electrons leave the conductor, several events can or will occur.

a. Since the conductor has lost electrons, it becomes positively charged there must, therefore, be a force of attraction between the escaped electrons and the conductor itself. It is possible to anticipate from this that the electrons will be attracted back towards the conductor. This is a very important point.
b. Electrons which have already escaped from the conductor form a negative 'space charge' which tends to repel any further electrons that try to leave the conductor.
c. If the heated conductor is surrounded by a gas or even just air, any electrons emitted are only able to travel a very short distance before a collision with a gas molecule takes place. This slows down the electron and deflects it from its original path. Such an action is normally undesirable in valves. For this reason, the valve

'envelope' (the glass tube or container itself) is evacuated by pumping during manufacture.

Paragraphs (a) and (b) lead to the following behaviour:

Electrons are emitted from the conductor's surface at a rate dependent upon the temperature of the conductor. Once they have been emitted they experience a force of attraction drawing them back to the conductor. They will eventually return there but, since emission is a continuous process, more electrons will leave the conductor to take their place. Thus, at any time, there will be a more or less constant cloud of electrons adjacent to the conductor's surface. This cloud is termed the 'space charge' (as mentioned earlier), and the effect is illustrated below.

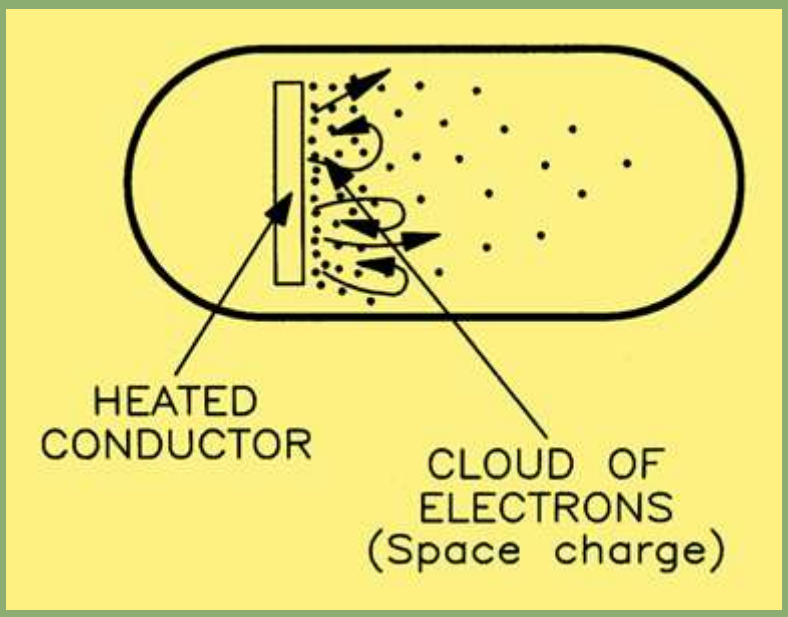

The space charge around a heated conductor; electrons are continually emitted from and return to the conductor's surface.

The ease with which an electron may escape from a material is expressed in terms of what is called the 'work function. of the material. This is the energy, measured in electron-volts (eV), that an electron must possess before it is able to escape from that material. For the record: 1 eV = 1.6 x 10^-19 Joules. Values of the work function, in eV, for various materials are: Caesium 1.75, Copper 4.2, Mercury 4.2, Tungsten 4.5 & Platinum 6.15.

Generally, those materials with low values of the work function would have melted by the time that they had attained the temperature at which significant emission had occurred. But one material that does not do so is tungsten. This gives good emission at 2,300 to 2,5000C, and melts at 3,380°C. However, a valve with a pure tungsten emitter would, and did, glow rather like an incandescent lamp. This was characteristic of early valves eg Fleming, but modern valves have been developed in which the tungsten surface has been coated with an oxide such as that of barium or strontium, that allows efficient emission of electrons at much lower temperatures, mere 7000C.

Construction of Filaments and Cathodes

The emitting conductor is heated electrically, as one would suspect, by passing a current through a filament of wire. This filament may either emit the electrons directly (in which case the device is known as a directly

heated valve) or it may be placed inside a tubular 'cathode' which emits the electrons (in which case we talk about indirectly heated valves), The two types are illustrated below.

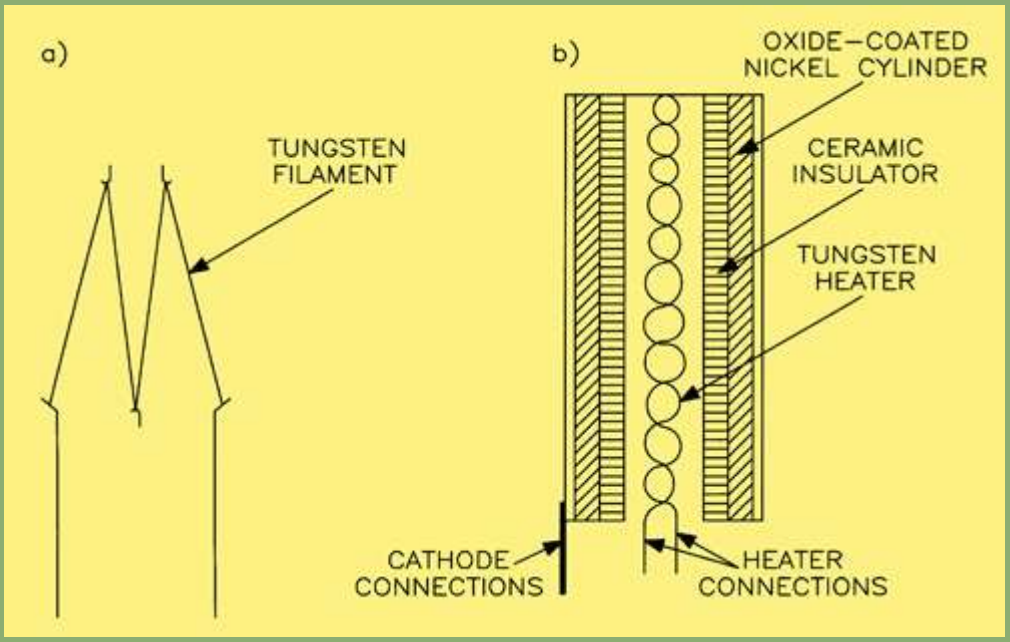

Construction of (a) directly heated filament and (b) indirectly heated cathode.

The directly heated type was employed for small battery powered valves, as in portable 1940's wireless sets for instance, the filament current being DC. The indirectly heated cathode is the standard type for mains powered valves, where the supply is AC, usually 6.3V or 12.6V, except in TV practice where a variety of heater voltages is possible. From the fact that the heater current required for even small signal valves is about 300 mA for 6.3V operation and 150mA for 12.6V operation, it is obvious that the heater alone dissipates almost 2 W of power! Since the heater is the most likely point of failure in a valve (having an average life of about 2,000 to 3,000 hours), it is then also obvious why the transistor, which requires no heater power, is a more efficient and reliable device.

Return to Series Contents or continue on to **The Diode Valve**

Return to Articles Contents Page

Valve Technology - A Practical Guide

A series of articles from 1993 by Graham Dixey C.Eng., MIEE republished by kind permission of Maplin Magazine.

Menu

The Diode Valve

The diode valve is so called because it has just two electrodes – the cathode and the anode.

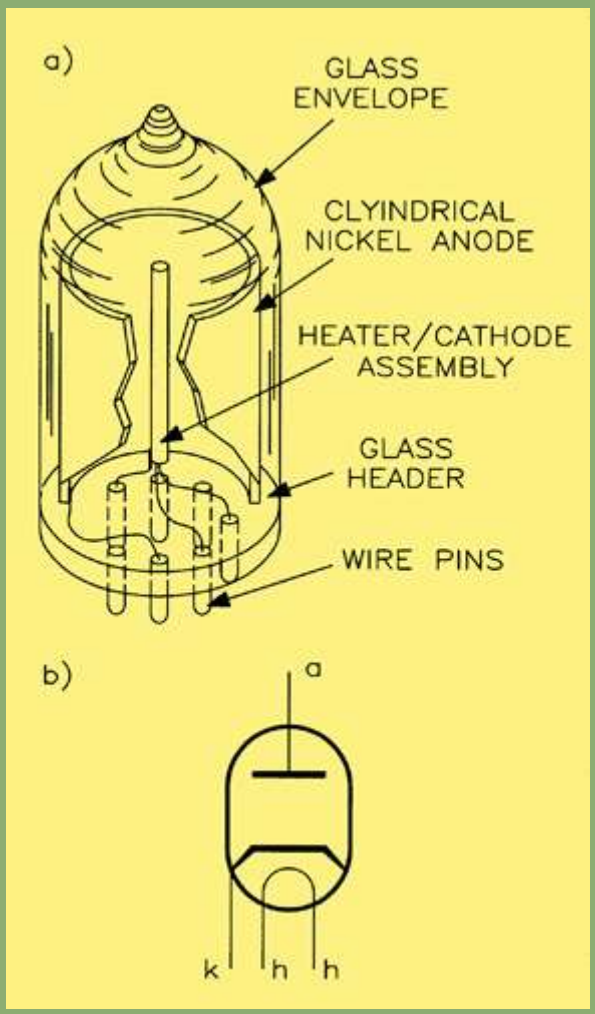

(a) Construction of a modern diode valve (indirectly heated type), (b) circuit symbol for a diode valve.

These correspond to the two electrodes of the original diode valve mentioned above, the cathode being the electrode that is heated and emits electrons, and the anode being the electrode that collects the electrons (notice also that these terms have passed forward into semiconductor phraseology - cathode, anode, emitter, collector!).

Since electrons are negative charged particles, they will only be attracted to the anode if this is given a positive potential with respect to the cathode. This explains why the valve only conducts in one direction, from cathode to anode, and not vice versa. It also explains the choice of the word 'valve' to describe the device, since a valve is, by definition, a one-way device. The Americans, however, never cottoned on to this terminology and always refer to them as 'vacuum tubes'.

The magnitude of the current flowing in a diode depends upon the number of electrons emitted and the magnitude of the voltage applied to the anode (known as the anode voltage Va). The amount of electron emission depends upon the

temperature of the cathode, which is fixed by the voltage supply to the heater, this being a constant value. The only true variable is, therefore, the anode voltage. The action of the latter in controlling the anode current can be explained as follows.

As we now know from the foregoing, the cathode is normally surrounded by a cloud of electrons known as the space charge. With zero anode voltage there is no current flow, and there is a state of equilibrium between the electrons being emitted and those falling back onto the cathode's surface, The application of a small positive voltage to the anode causes some of the space charge electrons to be attracted to the anode, resulting in a small anode current flow. The gaps created by these electrons leaving the space charge are filled by further emission from the cathode. Electrons arriving at the anode flow to the positive supply terminal, while at the same time an equal number of electrons leave the negative supply terminal for the cathode. This gives rise to a continuous current flow around the circuit, which may be detected by an ammeter placed in, say, the anode lead. The picture below shows an illustration of this.

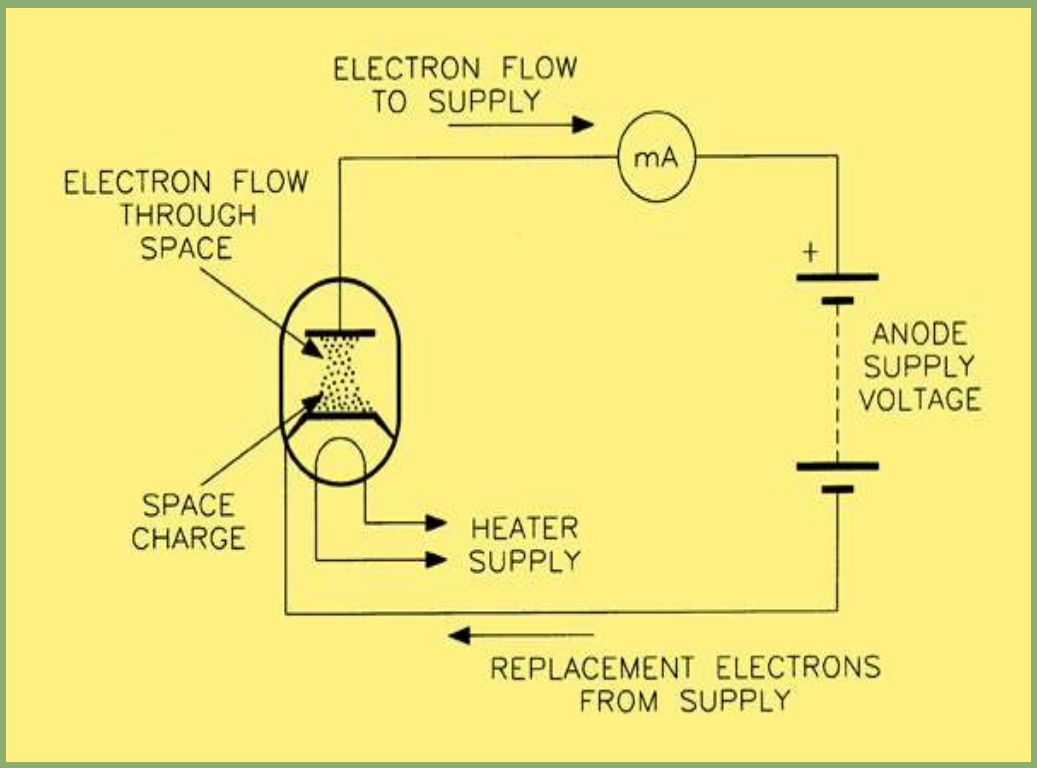

The flow of current in a diode valve.

Diode Static Characteristics

We now start getting into the ways in which specifications for thermionic devices are presented. For the diode, these illustrate clearly the dependence of anode current upon anode voltage.

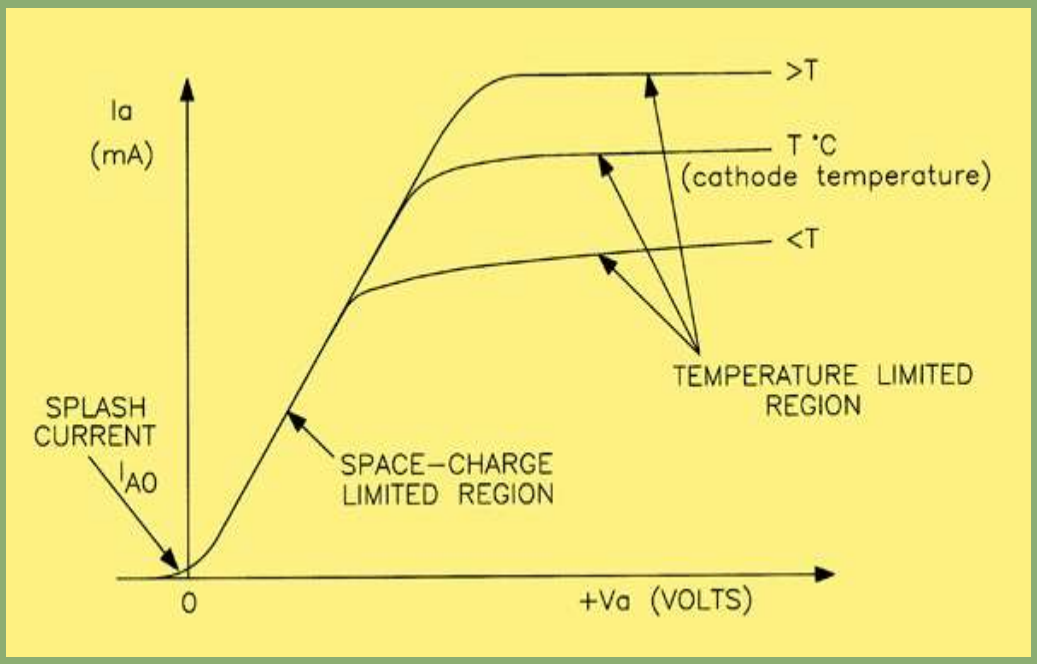

The static characteristic of a diode valve.

Above three curves have been drawn for different values of cathode temperature, although in practice, as explained earlier, the cathode is held at a constant temperature.

It is interesting to note that:

a. **The current is not exactly zero when the anode voltage is zero, but has a value (Iao) of a few micro-amperes. This is known as the 'splash current' and is the result of a few high energy electrons that manage to cross the inter-electrode gap even without an attracting potential.**
b. **In the space-charge limited region, the characteristic is nearly linear (actually following the 'three-halves' power law: Ia is proportional to $Va^{-3/2}$).**
c. **In the temperature limited region there is little change in Ia even though there are large changes in Va. This is because the anode is collecting electrons at the same rate as they are being emitted by the cathode.**
d. **No significant current flows when the anode is negative with respect to the cathode.**

The Anode Slope Resistance ra

It is worth introducing this parameter at this time since it is one that we shall make use of later in discussing the performance of more complex valves. It is defined as shown below,

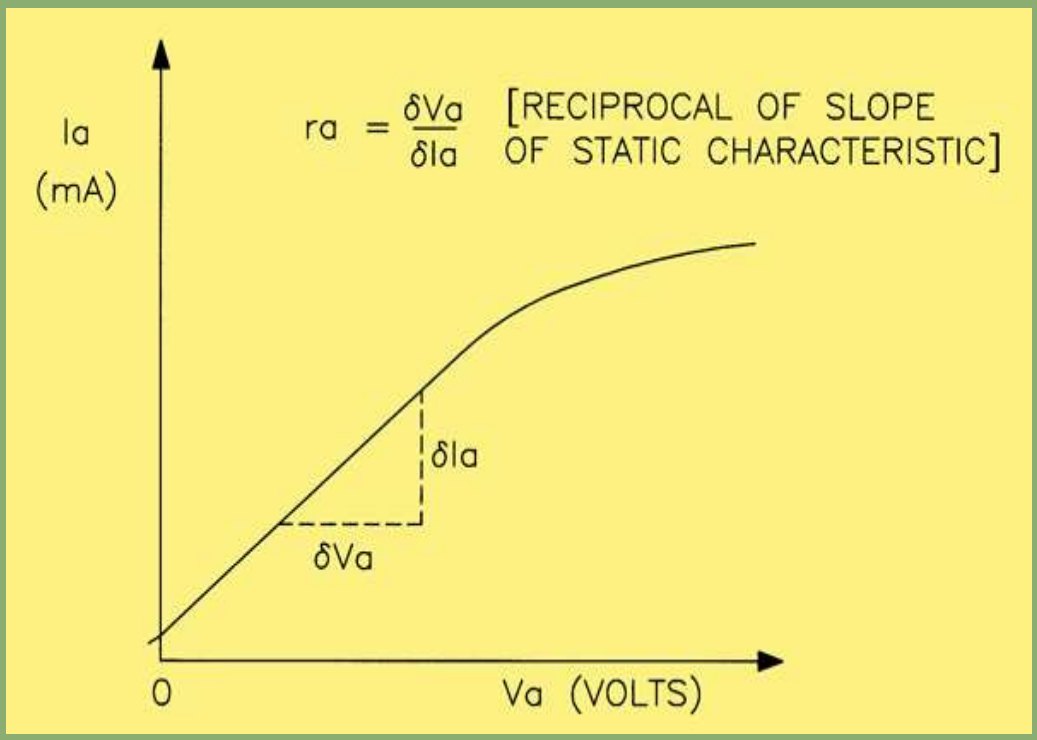

Defining anode slope resistance for a diode valve.

and is the value of resistance obtained by dividing a small change in anode voltage by the corresponding change in anode current. It is therefore the reciprocal of the slope of the static characteristic, and varies with the operating point, although fairly constant over much of the space charge limited region. This is a real value of resistance, since it represents the opposition of the valve to alternating quantities.

Series Circuit Operation

It is usual to operate a diode valve, which is clearly a non-linear device, in series with a resistive load, the latter being a linear device. It is possible to predict how the voltages and current in the circuit will vary by using a graphical construction.

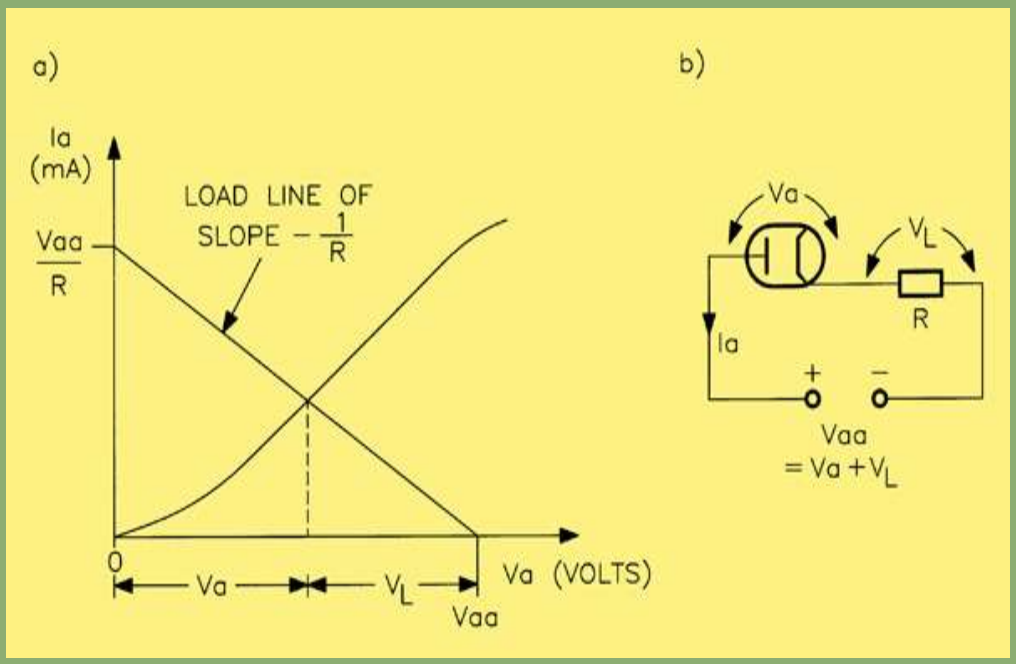

(a) The load line for a diode valve. (b) the diode in series with a linear resistive load.

The second image shows the diode in series with its load and defines the voltages and currents in question. A 'load line' of slope -l/R is drawn between the two points: Ia = Vaa/R Va = 0 and Ia = 0, Va = Vaa. As in solid state practice, the end points of a load line define zero conduction and maximum conduction, the latter being dependent upon the values of supply voltage and load resistance. Any other points on the load line imply intermediate levels of conduction. By dropping a construction line from the intersection of the load line and the static characteristic, we can see how the total supply voltage Vaa is divided into the two separate voltages Va (the voltage across the diode) and Vl (the voltage across the load).

The Dynamic Characteristic

By taking a number of different values of supply voltage Vaa (as would happen if the supply was alternating, for example) and assuming a constant value for the load Rl then, by drawing a separate load line for each value of supply voltage, the dynamic characteristic can be obtained, as shown below.

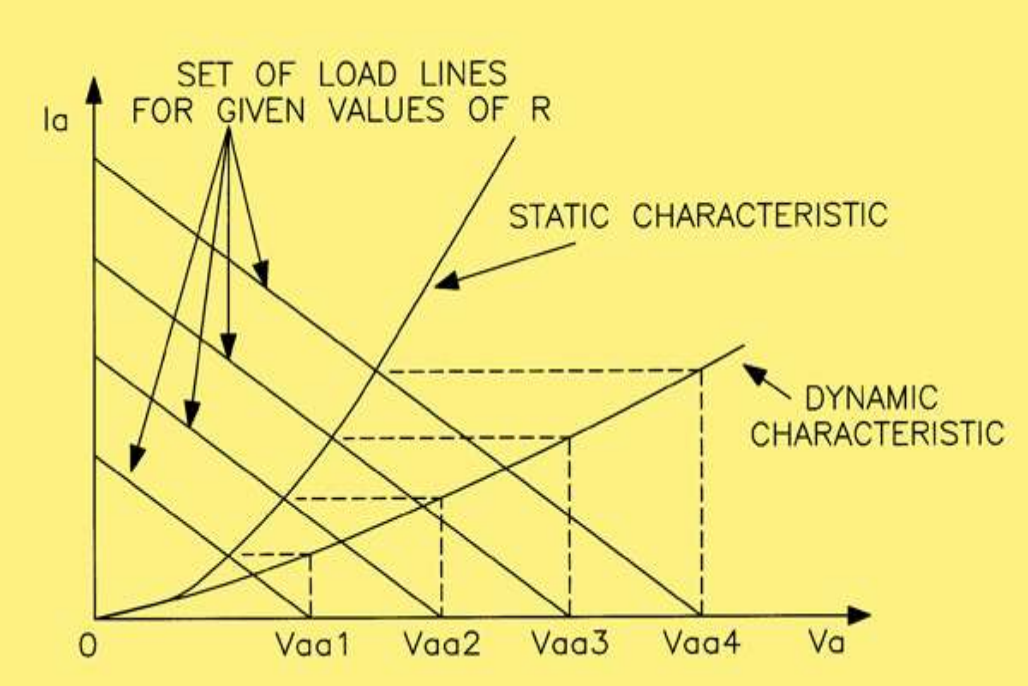

Obtaining the dynamic characteristic for a diode valve and its load.

The points on the dynamic characteristic are obtained by projecting, horizontally, the intersection of a load line and the static characteristic until it in turn intersects a vertical line drawn from a supply voltage value. Since the dynamic characteristic is drawn for a range of values of the supply voltage, this implies that the latter is varying, in other words it is an alternating supply rather than DC, as is the case in rectification.

Return to Series Contents or back to **Electron Emission** or continue on to **The Triode Valve**

Return to Articles Contents Page

Valve Technology - A Practical Guide

A series of articles from 1993 by Graham Dixey C.Eng., MIEE republished by kind permission of Maplin Magazine.

Menu

The Triode Valve

The diode valve is essentially a rectifier, turning AC into DC, whether these be large mains voltages or relatively small signal voltages, as in the detection of modulated radio signals, for example. True, it can perform other useful functions as well, but one thing it cannot do is amplify a signal, For this we need to develop the basic device further. We mentioned earlier Lee de Forest's work with a diode, in which he had inserted a wire grid between cathode and anode in order to control the anode current. This was the first triode valve – triode obviously meaning 'three electrodes', although he actually called it an 'audion'. The construction of a modem triode is shown in (a) below, together with its circuit symbol, (b).

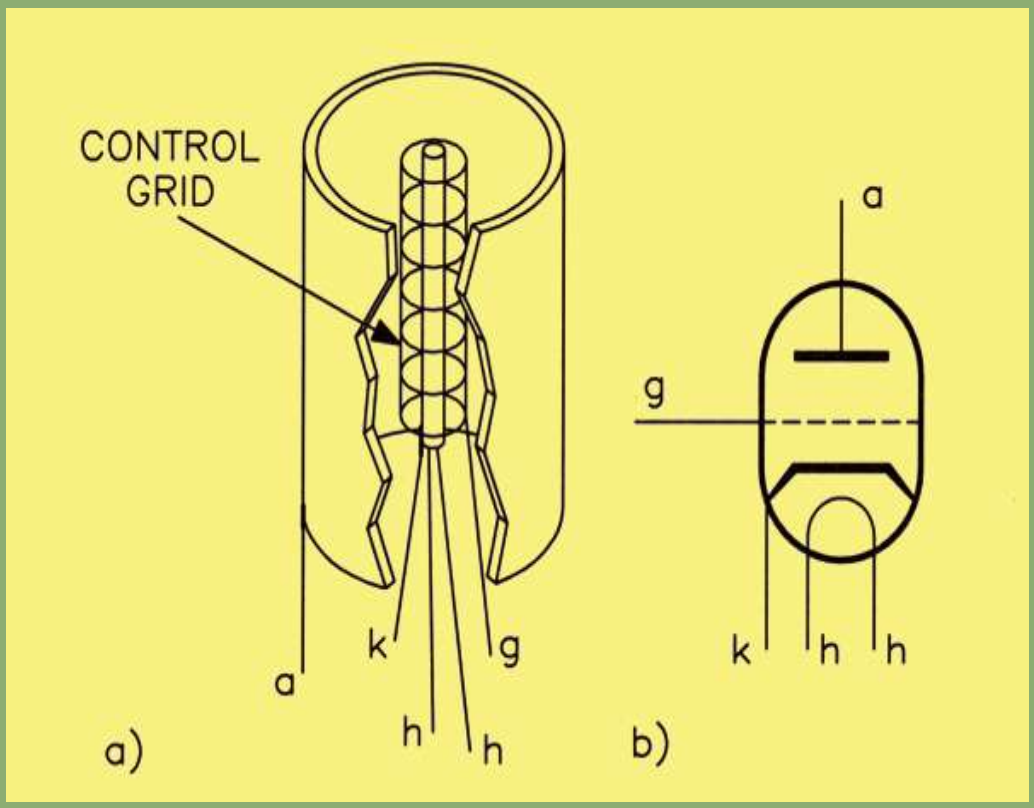

(a) Construction of a triode valve, (b) circuit symbol for a triode valve.

Based on what we have already seen for the diode, it has an indirectly heated cathode and an outer anode electrode. The third electrode is known as the control grid. It is quite open in form, so that there are relatively vast areas for the electrons to pass through on their way to the anode. It is, quite literally, in the vast majority of cases, no more than a single spiral of wire. In use, the control grid is taken to a potential that is negative with respect to that of the cathode. As a result, there is a negative potential gradient between the cathode and the control grid (tending to repel electrons), and a positive potential gradient from grid to anode, so that electrons that do get through the grid are accelerated to the anode where they are collected.

If the negative potential of the control grid is fairly small, then most electrons emitted by the cathode have sufficient energy to counter the repelling force of the grid and make it to the anode; a small percentage are turned back to the cathode so that, overall, the anode current is actually reduced in value by the presence of the grid. The more negative the grid is made then the more influence it is able to exert on the electrons which are attempting to reach the anode. Eventually, it will be able to turn back all electrons when its negative potential is large enough. The anode current is then said to be 'cut off, and the value of grid voltage that just causes this condition is termed the 'grid cut-off voltage' – all very reasonable!

Another way to picture this effect is to see the electrons leaving the cathode as being subject to two conflicting influences – the negative repulsion of the control grid and the positive attraction of the anode. Because the control grid is very close to the cathode (the anode is far away by comparison), it can exercise quite a strong influence with only a small negative voltage. The higher the energy possessed by an electron, the more chance it has of accelerating through the open wires of the grid and reaching the anode. At some point, the influence of the grid will outweigh that of the anode, no matter what the energy level of the electrons, and the current flow will stop entirely. It's worth mentioning at this point that this is exactly how a typical Field Effect Transistor works, and which came into existence out of the need for a semiconductor which could do the sort of jobs that the old valves used to do!

The Triode Mutual Characteristics

The behaviour described above can be understood also from the mutual characteristics. which are graph plots of anode current versus grid voltage for different values of anode voltage. A set of these is shown.

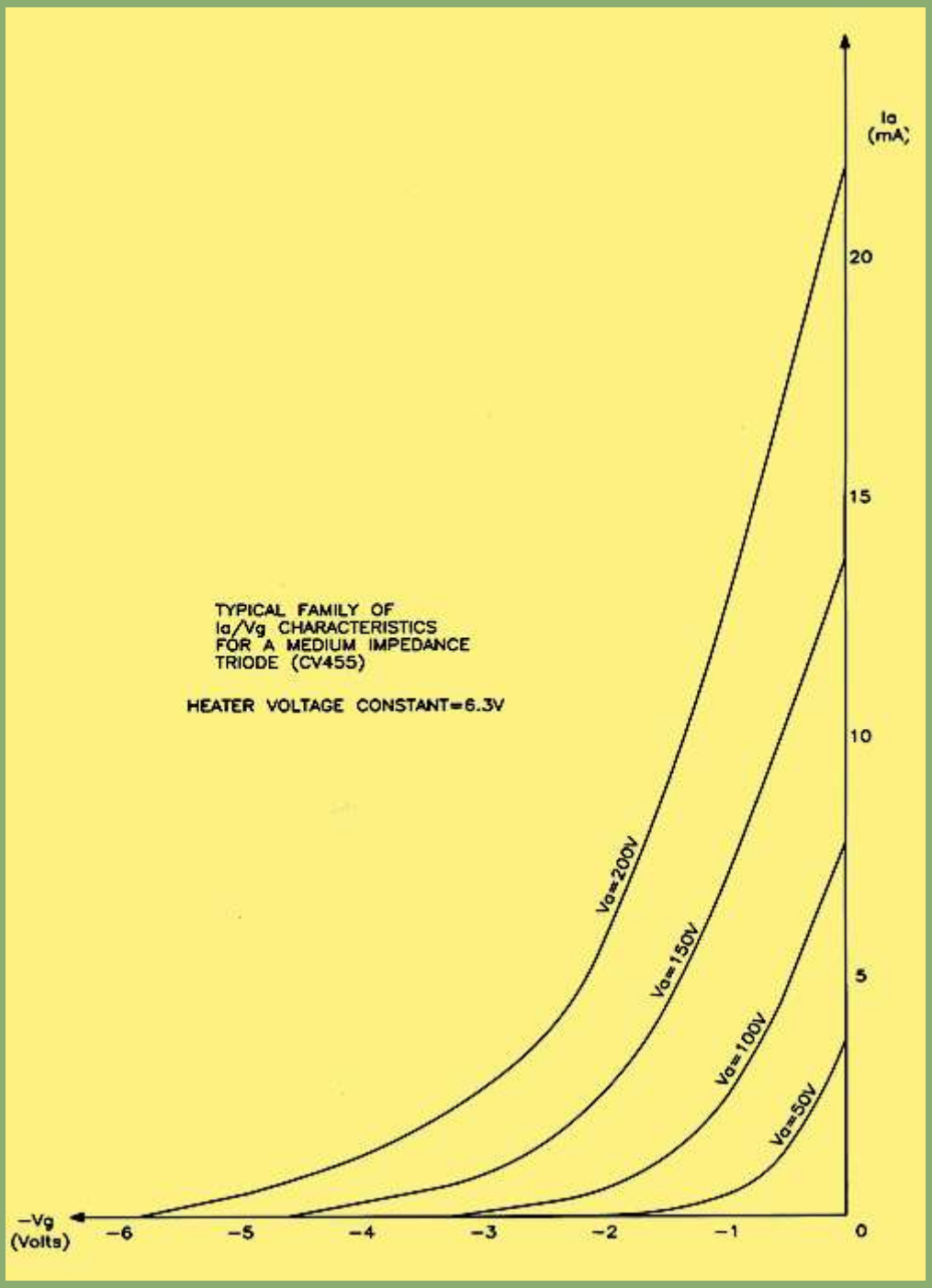

Family of mutual characteristics for a CV455 triode.

the anode voltages being chosen at 50. 100. 150 and 200 V. These are actual examples for the CV455 (ECC81) double-triode valve.

Note that the higher the anode voltage. the larger the negative grid voltage has to be in order to produce a given anode current or to cut the valve off completely. For example. if the grid voltage. Vg. is 0 V then the anode current is 4 mA for an anode voltage of 50 V. but is 22 mA when the anode voltage is increased to 200 V. Also. when the anode voltage is only 50 V, the grid cut-off voltage is about -2 V, but when the anode voltage is 200 V, -6 V is needed to cut off the anode current. From the fore going explanation, this is just the behaviour that we should expect.

Mutual Conductance

The ability of the control grid to control the anode current is expressed by a second valve parameter, known as the mutual conductance, gm. This is seen defined in the illustration above as the slope of a characteristic, and is given by:

gm = (change in anode current) / (corresponding change in grid voltage)

This is an important parameter, because it is also useful for predicting the triode's performance as an amplifier. The units traditionally used for measuring gm are mA/V (milliamps per volt) although these days, no doubt, we ought to call them mS (milli-Siemens). Old habits die hard though, as no doubt you will notice! The value of gm for the CV455 (ECC81) is 4 mA/V.

The Triode Anode Characteristics

Another set of characteristics are those plotted for anode current against anode voltage for a selection of values of grid voltage. In principle these are similar to the output characteristics of a transistor (Ia/Vc for values of Ib), though the shape is quite different. From these it is possible to see how, for a given value of grid voltage, the anode current varies with anode voltage. There is clearly a direct, almost linear, relationship.

The illustration below shows a set of these characteristics for the CV455 (ECC81) triode. As for the diode valve, the reciprocal of the slope of any curve is the anode slope resistance, ra, of the valve. For this particular valve, it has a value of about 13.5kΩ.

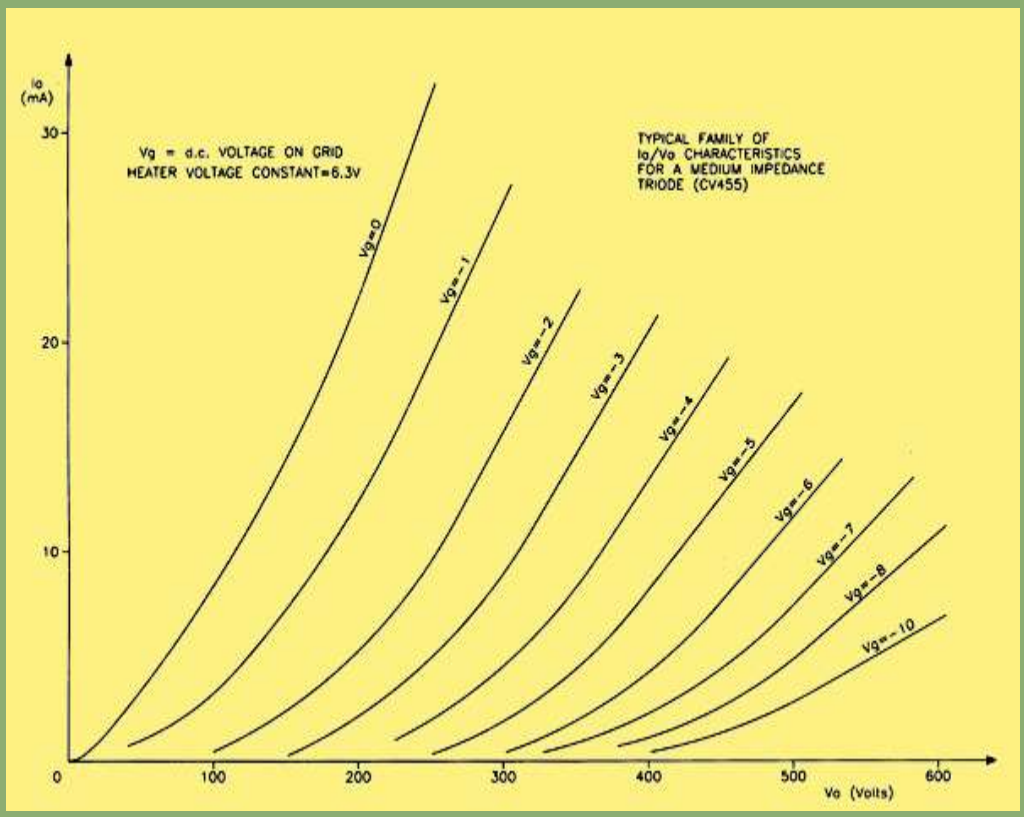

Family of anode characteristics for a CV455 triode.

Cathode Bias

We have already said that, in practice, the grid is taken to a voltage that is negative with respect to the cathode, This will be explained more fully when amplifiers are discussed but, for now, perhaps it is not too unreasonable to accept this basic idea, This would seem to imply that we need an actual negative DC supply and, in fact, in the early days of valve technology, such a supply was provided, In battery operated receivers a special battery was employed which comprised a number of 1.5 V cells with brass tubular connections, into one of which a banana plug would be fitted to select the required value of grid bias voltage. Such a method is neither desirable nor essential in the case of mains-operated equipment, and a different philosophy allows us to dispose of the separate supply completely. It works as follows. The terms positive and negative are purely relative on/s. 1/vo voltages may be both positive with respect to some reference. say 0 V. However. the smaller of the two voltages can be said to be negative with respect to the other one. Thus if we wish to make the grid of the valve negative with respect to the cathode, we only need to make the cathode positive with respect to the grid, to achieve the same object. How this is done is illustrated below.

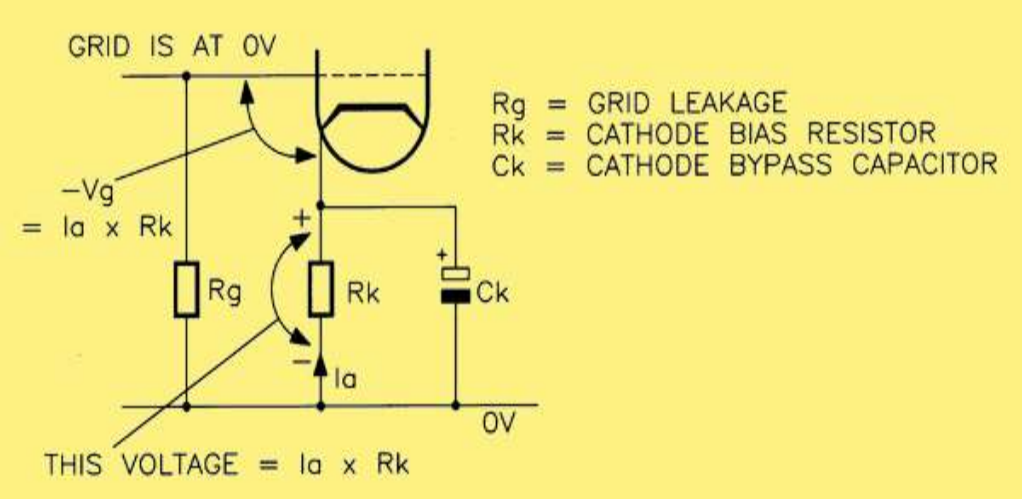

Method for deriving cathode bias for a valve.

The control grid is connected to 0 V via a high value resistor (typically 1 MΩ) known as the grid leak. Since no current flows in this resistor there can be no voltage drop across it and, therefore. the grid must be also at 0V as far as DC is concerned. The cathode. in contrast. has a resistor inserted in series, which is bypassed by a capacitor to avoid negative feedback effects (exactly as is practice with transistor amplifiers). The product of this resistance value and the current flowing in it (the anode current Ia produces a voltage drop. A moment's thought shows that the value of this voltage drop must equal the value of grid bias required, since the cathode will then be positive with respect to the grid by this amount. For example, if the grid bias voltage is to be -2 V when the anode current is 10 mA, then the cathode resistor must have a value equal to (2 / l0) kΩ, which equals 200Ω, which can be rounded up to 220Ω.

Return to Series Contents or back to **The Diode Valve** or continue on to **The Triode Amplifier**

Return to Articles Contents Page

Valve Technology - A Practical Guide

A series of articles from 1993 by Graham Dixey C.Eng., MIEE
republished by kind permission of Maplin Magazine.

Menu

The Triode Amplifier – an Introduction

In general, amplifiers can be classified according to their characteristics and properties. One such classification is according to the frequency range over which they are supposed to operate, and which falls into four broad divisions:–

1. **direct-coupled amplifiers;**
2. **audio-frequency amplifiers;**
3. **radio-frequency amplifiers and**
4. **video-frequency amplifiers.**

Another possible classification may be used to determine whether the amplifier is 'aperiodic' (untuned) or tuned. For example, audio-frequency amplifiers are aperiodic, because they are intended to handle all frequencies in the audio-frequency spectrum equally. Radio-frequency amplifiers, on the other hand, whether in transmitters or receivers, are tuned amplifiers, since they are intended to concentrate on a narrow band of only frequencies centred around a single radio-frequency, often the 'carrier', to the exclusion of all others.

Amplifiers can also be classified as either voltage or power amplifiers, according to whether the primary aim is to raise the voltage level or the power level of a signal. This is true whether the amplification is at audio or radio-frequencies.

Finally, amplifiers can be classified according to their operating conditions, eg, class A. class B, class AB or class C. But for the moment at least we shall consider the use of the triode valve as a voltage amplifier at audio-frequencies.

The Triode as an AF Voltage Amplifier

To understand how amplification is possible with a triode valve, we need to remind ourselves about the mutual characteristics of a triode (the graph of anode current Ia against grid voltage Vg), and of the need for a grid bias voltage and how the latter is obtained. Previously we discussed this characteristic, in particular how it showed that the standing value of anode current through the valve depends upon the negative voltage applied to the grid; if this negative voltage is made sufficiently large, the anode current becomes cut off altogether. We also discussed how the negative bias voltage for the control grid could be obtained by making the cathode positive with

respect to the grid, this then being termed cathode bias.

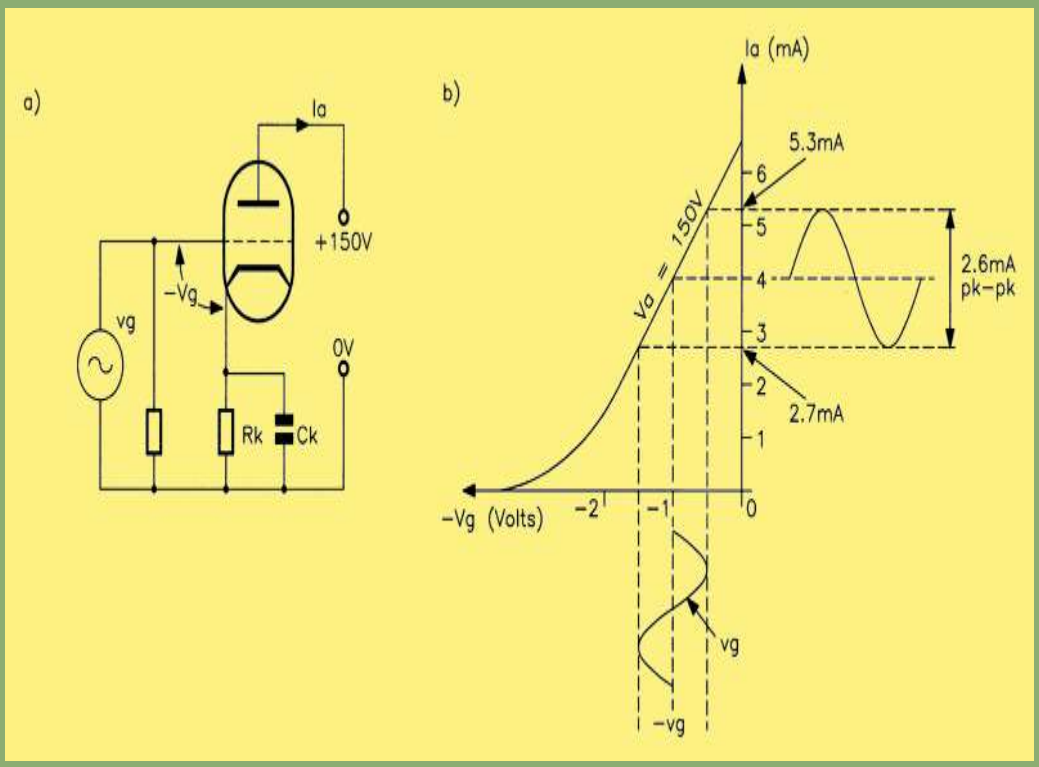

(a) A triode valve with grid bias Vg and an alternating input signal vg: (b) Standing and alternating voltages and currents for the valve of (a)

With the above in mind, now look at (a) and (b) above. Figure (a) shows the triode valve with cathode bias components Rk and Ck, and the grid leak resistor Rg. An alternating input signal (a sine-wave) is applied to the grid; the latter is known as Vg (small 'V') as opposed to Vg which is the DC bias voltage. This situation is shown graphically in Figure (b). The construction shows that, for this particular valve, the value of the bias voltage Vg is -1.0 V, which produces a standing value of anode current Ia equal to 4 mA. This is obtained by projecting upwards from the value of -Vg until we intercept the static curve for Va = 150 V and then projecting across to the vertical axis where we read off the value of Ia, namely the 4 mA referred to. This discussion has only dealt with the DC conditions which are valid in the absence of a signal.

However, the above amplifier has an alternating signal voltage applied to the grid and Figure (b) shows that this has a peak value of 0.5 V. Thus, as can be seen from this figure, the grid voltage swings between the limits of -0.5 V and -1.5 V, this occurring equally on either side of the bias voltage value of -l.0 V. From this we would expect that the anode current would also alternate in a similar manner, increasing on the 'positive going' half-cycles and reducing on the 'negative going' half-cycles. Notice the reference to the 'positive going' half-cycle rather than simply saying positive half-cycle. This is, of course, because the grid never actually becomes positive (with respect to 0 V) but only 'less negative'. The peaks of the alternating grid signal voltage have been projected upwards to intercept the static curve referred to earlier and then projected across to the Ia axis. This gives the limits of the corresponding variation of anode current.

When the grid voltage swings to -1.5 V the anode current falls to 2.7 mA, and when the grid voltage swings up to -0.5 V, the anode current then increases to 5.3 mA, This represents a Pk-to-Pk anode current variation of 2.6 mA, centred about the steady anode current (no signal) value of 4 mA.

So far we have used a voltage variation on the grid to produce a corresponding variation in the anode. That is to say, we have a voltage and a current output. What we for voltage amplification is to have voltage output for a voltage input.

The Anode Load Resistor

Of course, all we need to do to turn current into a voltage is to pass through some passive component which is capable of developing a potential

difference. Obviously such a device should be linear if we wish to prevent unnecessary distortion occurring. The choice, naturally, is a resistor. This resistor is inserted in series with the anode supply voltage so that the anode current flows through it on its way to the positive supply terminal. This is demonstrated below.

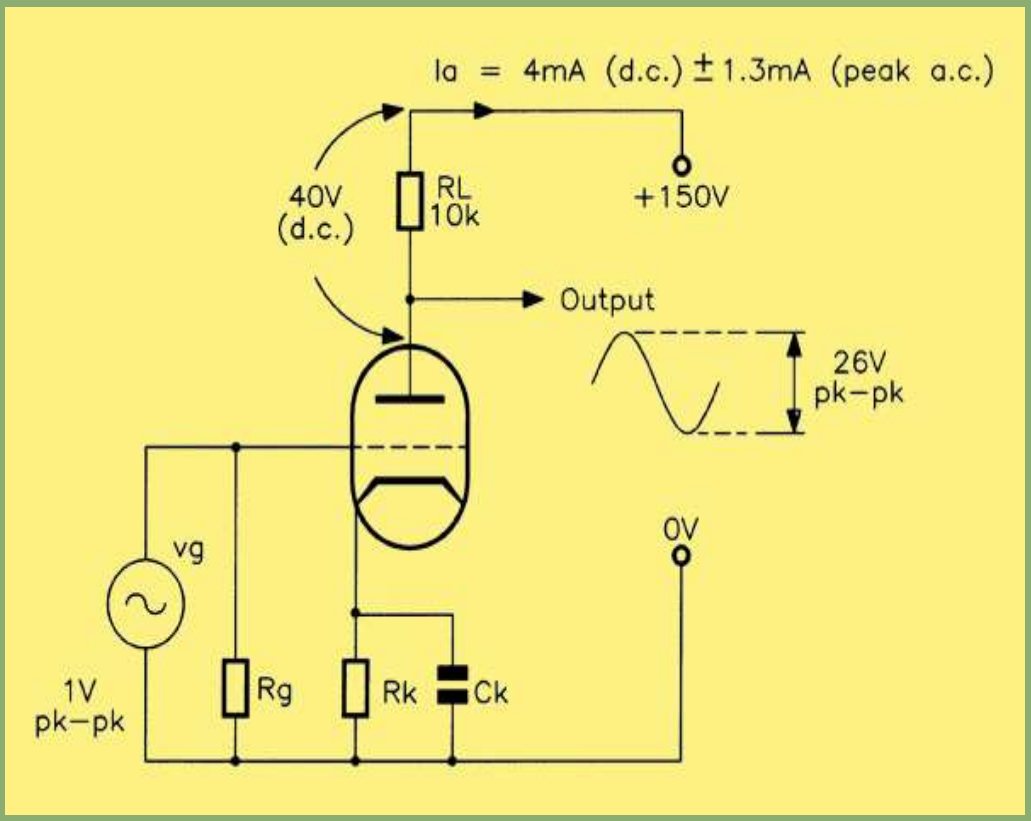

Developing an output voltage by means of a resistive anode load.

There will, therefore, be a potential difference across it, which can be seen to have two components, as follows:–

- **i. A steady voltage equal to the product of the standing current (Ia = 4 mA) and the value of the anode load resistor (in this case, 10kΩ). This product equals 40 V.**
- **ii. An alternating voltage whose peak value equals the product of the peak value of the alternating anode current (1.3 mA) and the value of the anode load resistor (10kΩ). This product equals 13 V. Thus, by inserting a load resistor in series with the alternating anode current, we have effectively converted the latter into an alternating output voltage of a Pk-to-Pk value of 26 V.**

This is clearly much greater than the value of the input signal voltage. By comparing these two values, input and output, we can obtain a figure for the voltage amplification factor (VAF) of the stage.

VAF = (alternating output voltage) / (alternating input voltage)

Obviously we must compare the two voltages specified in the same way, that is, both peak, both Pk-to-Pk or both RMS. We don't know the latter but could calculate it; we know both of the former and one is as good as another for our purposes. Let us use Pk-to-Pk values thus:

VAF = (26.0 V) / (1.0 V) = 26

in other words the voltage gain is 26 times.

General Expression for Voltage Gain

There is a simple expression which can be used to find the voltage gain of a stage such as that shown above. It involves just two factors: the mutual conductance, gm, of the valve, and the 'effective' load in the anode circuit. In the case of this example, the anode load is simply the 10kΩ resistor. In practice, this stage might well feed another, following, one, in which case the anode load resistance of the first stage would be shunted by the input impedance of the second. To take account of such shunt resistances, the effective load is termed the 'equivalent load resistance', denoted by Req. The general expression for voltage gain is then given by:

VAF = gm x Req.

We ought to be able to use the above expression to confirm the voltage gain value obtained graphically in the previous example. The value of Req is clearly just 10kΩ, since there is no following stage attached. Okay. The next question is, then, what is the value of gm? If we knew the valve type, we could simply look up the typical value of gm in a valve data book. However. we will instead obtain it in a way that will make use of the theory given earlier in the series – a much more useful if more lengthy procedure!

The gm of a valve can be obtained by measuring the slope of the mutual characteristic. This measurement should be made at the operating point, that is the portion of the characteristic at which the valve is seen to be DC biased. in this case, defined by Vg = -1.0 V; Ia = 4 mA. The mutual characteristic of Figure (b) at the top of the page is now repeated below with the appropriate construction added as follows:–

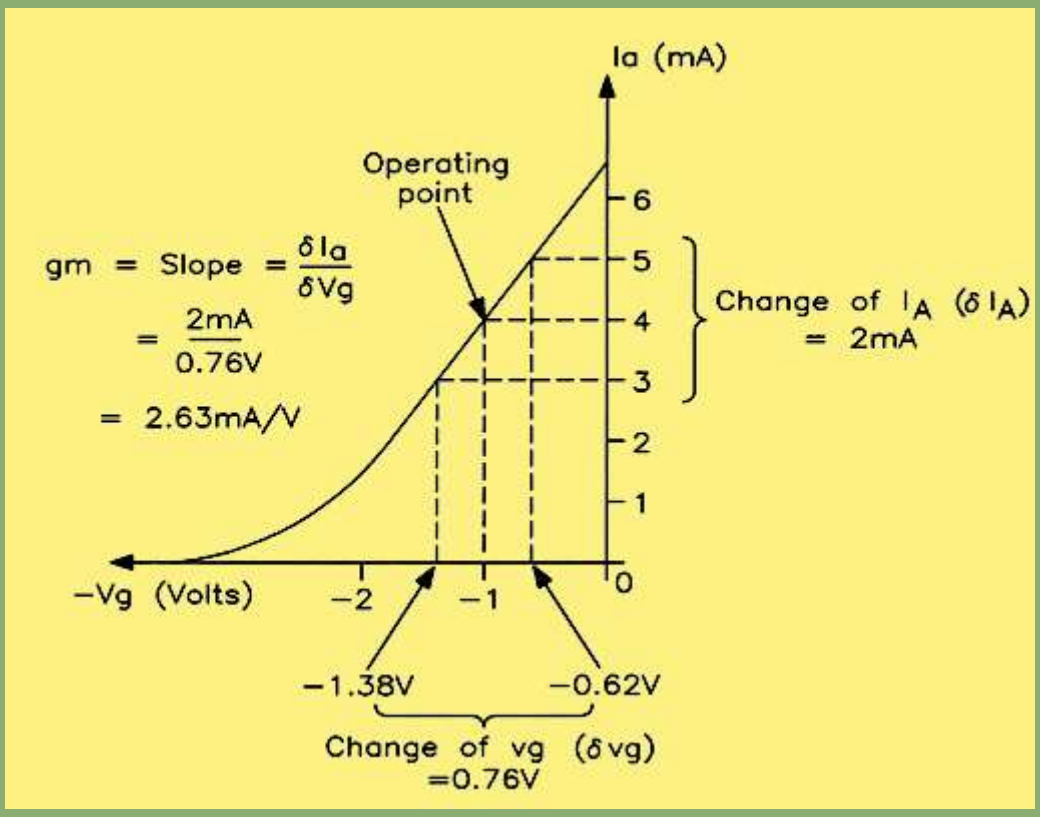

Determining the gm of a triode valve.

A graph has been drawn with convenient increments of anode current, Ia. in the vertical Y axis; in this case the increments of Ia are 1 mA on either side of the standing quiescent value of 4 mA. ie total change of Ia (delta a) of 2 mA. Note use of Greek letter delta, also often used to describe the triangular shape outlined by the dotted lines in the diagram above,thus identifying that these are not the static DC biased values we are dealing with. All we need do now to find the value of gm is to project this variation delta Ia downwards onto the horizontal Vg axis to find the corresponding change in Vg (delta Vg). Dividing the change in Ia (delta Ia} by the corresponding change in Vg (delta Vg} yields the mutual conductance gm.

Since the increment in Vg is from -0.62V to -1.38V. then the total change in Vg is 0.76 V giving a value for gm of 2 mA / 0.76 V. which equals 2.63 mA/V. A perfectly reasonable value for a triode. We are now in a position to calculate the voltage gain of the stage.

As stated previously. VAF = gm x Req

where gm = (delta Ia) / (delta Vg)

VAF = 2.63 (mA/V) x 10 (kΩ) = 0.00263 (A/V) x 10,000 Ω = 26.3.

This is the figure obtained previously, thus pointing to the validity of the formula used. Note that the product of gm in mA/V and load resistance specified in kilohms will give the correct numerical value, a useful fact which avoids the use of the appropriate powers of 10 (since these are implicit as in the method of the second line above).

The Triode Parameters

We have now met two of the three triode parameters, namely the anode slope resistance ra, and the mutual conductance gm. The third of the parameters is μ (mu) and is known as the 'amplification factor'. This is NOT the same thing as the Voltage Amplification Factor (VAF) referred to above. μ is a parameter of the valve itself, and has no relation to the value

of anode load used. VAF is the voltage gain of an actual stage and is dependent upon the value of anode load used. It is not surprising that the value of VAF will always be somewhat less than the value of μ, since there will always be some signal loss due to the fact that the valve amplifier has some internal resistance (ra in fact). What μ does give us is a clue to the ability of any given valve to act as a voltage amplifier – a starting point for a design, if you like. There is a simple relationship between the three valve parameters, by which anyone can be calculated if the other two are known. This relation is:–

μ = ra x gm

Taking a real example, the entry in the table below for the ECC81 shows that ra = 13.5kΩ and gm = 4 mA/V.

Type	Heater		Anode		Negative	r_a (kΩ)	g_m (mA/V)	μ
	Volts	Amps	Volts	Amps	Grid Volts			
ECC81	6·3	0·3	100	3·7	1·0	13·5	4	54
	12·6	0·15	180	11·0	1·0	9·4	6·6	62
ECC82	6·3	0·3	100	11·8	0	6·2	3·1	19
	12·6	0·15	250	10·5	8·5	7·7	2·2	17
ECC83	6·3	0·3	100	0·5	1·0	80	1·25	100
	12·6	0·15	250	1·2	2·0	62·5	1·6	100

Principal parameters of ECC81, ECC82 and ECC83 double triode valves. For an understanding of how Mullard/Philips named receiving valves see here.

These two figures can be multiplied together directly to give the amplification factor μ. Thus, &mu' = 13.5 x 4, = 54. This is the value given in the table. There are, of course, no units for μ since it is a ratio of output voltage over input voltage (signal values). This can be seen from a simple multiplication, as follows:

ra = (change of Va) / (change of Ia)

gm = (change of Ia) / (change of Vg)

If we multiply these two expressions together, to get an expression for μ we shall end up with the expression,

μ = (delta Va) / (delta Vg) since the (delta Ia) term will cancel out in both expressions.

Frequency Response of Triode Amplifier

The bandwidth of an amplifier is conventionally defined as being the range of frequencies lying between the two points, where the response has fallen by 3 dB from the mid-band value. At high frequencies the response is limited by shunt capacities, such as the inter-electrode capacity between grid and cathode (known as Cgk). This latter is an obvious 'stray' capacity in parallel with the signal path. What is not so obvious is that this value of input capacitance is enhanced by a further shunt capacity which is 'reflected back' to appear in parallel with Cgk. This additional capacity has

a value equal to Cag (the capacitance between anode and grid) multiplied by (approximately) the voltage gain of the stage; this is termed 'Miller effect'. Thus, the input capacitance can actually be quite high, and this sets a limit on the high-frequency performance of triodes, unless special measures are taken to improve this aspect of performance.

The response at the low-frequency end of the spectrum is largely determined by external factors, namely the high-pass filter formed by the series coupling capacitor and the input resistance of the valve. The latter is apparently infinite, because the input circuit of the valve itself is a physical gap between the cathode and grid, with no current flowing in the grid circuit. However, the grid leak resistor appears in parallel with the grid-cathode path and, since this usually has a resistance of 1MΩ, this becomes the input resistance of the amplifier. The frequency response at low frequencies is then determined by the value of the series coupling capacitor.

With a simple RC filter of this type, the -3 dB response point occurs when the reactance of the capacitor equals the value of the resistor. This makes it easy to calculate the value of capacitor required in order to obtain any given low-frequency response. Let us take an example.

Suppose that the grid leak does have a value of 1MΩ and that the lower -3 dB response point is to be at 40 Hz. This means that the reactance of the coupling capacitor must have a value of not more than 1MΩ at this frequency. Thus, since

$Xc = 10^{-6}$ Ω and $Xc = 1 / (2\pi \times f \times C)$

Then; $C = 1 / (2\pi 40)$ µF = 0.004 µF = 4 nF

This illustrates how the high input impedance of valves allows small values of coupling capacitors to be used. In a solid state amplifier using Bipolar Junction Transistors, coupling capacitors are more likely to have values of the order of lO µF or so (since the input impedance of a common emitter amplifier is of the order of only 2 to 3kΩ). In practice, valve audio-frequency amplifiers in the past commonly used coupling capacitors having values of, say, 0.1 µF (100 nF), which is plenty enough.

Return to Series Contents or back to The Triode Valve or continue on to Currently Available Triode Valves

Return to Articles Contents Page

Valve Technology - A Practical Guide

A series of articles from 1993 by Graham Dixey C.Eng., MIEE republished by kind permission of Maplin Magazine.

Currently Available Triode Valves

Not surprisingly, the availability of valves of any sort is extremely limited these days, since there are so few applications for them (and for those that are available, the quality can be a bit suspect), Forgetting about the high-power applications such as radio transmission and industrial eddy current heating sets, for which they are ideally suited, the audio field offers the major application area now, especially for power amplifiers, In this case the first stage is likely to be a pentode, as will be the power output stage also (operating in push-pull),

Triodes are used for the intermediate amplification, and the most usual (and useful) configuration is the double-triode, that is two triodes of the same type in the same envelope (glass tube). There have always been three firm favourites in these stakes, and these are the ones still readily available today. They are the ECC81, ECC82 and ECC83 also known alternatively as the 12AT7. 12AU7 and 12AX7 respectively.

In the latter nomenclature the first part. the number 12. indicates the heater voltage (actually 12.6 V AC at 0.15 A). and this implies that a 12 V supply is required to power the heaters. In fact this is not so since the heater is actually centre-tapped. so making it possible to parallel the two halves and energise them from a 6.3 V AC supply at twice the current, namely 0.3 A (If powered in series the higher voltage is actually 12.6 V) The pin connections for all these three types are the same and are shown below.

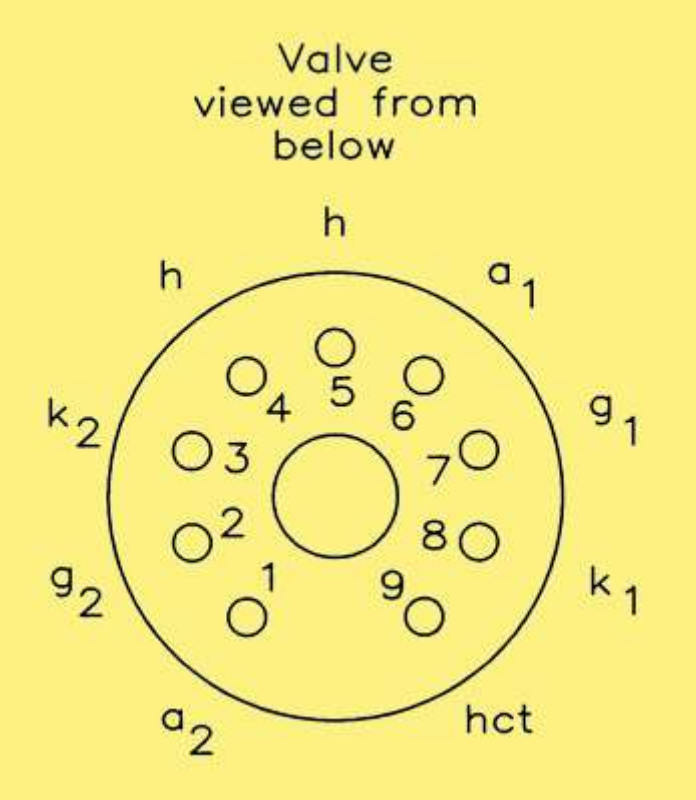

Base connections for the ECC81, ECC82 and ECC83 double triode valves.

This makes it easy to swap the different types around in the same valve holder while experimenting with them.

Type	Heater Volts	Heater Amps	Anode Volts	Anode Amps	Negative Grid Volts	r_a (kΩ)	g_m (mA/V)	μ
ECC81	6·3	0·3	100	3·7	1·0	13·5	4	54
	12·6	0·15	180	11·0	1·0	9·4	6·6	62
ECC82	6·3	0·3	100	11·8	0	6·2	3·1	19
	12·6	0·15	250	10·5	8·5	7·7	2·2	17
ECC83	6·3	0·3	100	0·5	1·0	80	1·25	100
	12·6	0·15	250	1·2	2·0	62·5	1·6	100

Principle parameters of ECC81, ECC82 and ECC83 double triode valves.

The table above shows the principal data for the three types for comparison. This data includes typical anode and grid voltages. and a corresponding anode current value. The values of the triode parameters. μ ra and gm are also given. This table indicates that the ECC81 is a medium gain valve with moderate values of ra and quite high values of gm; the ECC82 is a low gain valve with low values for both of these parameters but the ECC83 is a high gain valve due to its having a much higher value of ra even though its gm value is very low.

Return to Series Contents or back to The Triode Amplifier or continue on to The Design of a Triode Amplifier

Return to Articles Contents Page

Valve Technology - A Practical Guide

A series of articles from 1993 by Graham Dixey C.Eng., MIEE republished by kind permission of Maplin Magazine.

Design of a Triode Amplifier

Now we shall design an amplifier from square one and see how it stands up to a practical test. The valve that we shall use is the ECC81, which we now know is the same thing as a 12AT7, or even a CV455. Since this comprises two triodes in a single envelope, we shall only need to use one of them, at least initially.

It would be nice if the design of an electronic circuit could be carried out merely by using a set of formulae into which we inserted the required parameters for performance, and out came all the component values! Unfortunately, life just isn't like that and there is usually an element of 'guestimation' somewhere in the design, often at the beginning. For example, supposing that we know that we need to amplify a certain signal by 20 times, how do we proceed to design an amplifier using this single fact? What DC supply voltage should be applied to the stage? What should be the value of the anode current? Where do we place the grid bias point on the mutual characteristic? In short, where do we start? Where we start is dictated largely by common sense, though a little previous experience helps as well. Take the question of the supply voltage; this may well be dictated by the availability of an existing power supply. However, we should also consider how large the output signal can be, since this may influence the choice of an alternative DC supply. Let us take an example. The circuit for the amplifier that we are going to design is shown in below.

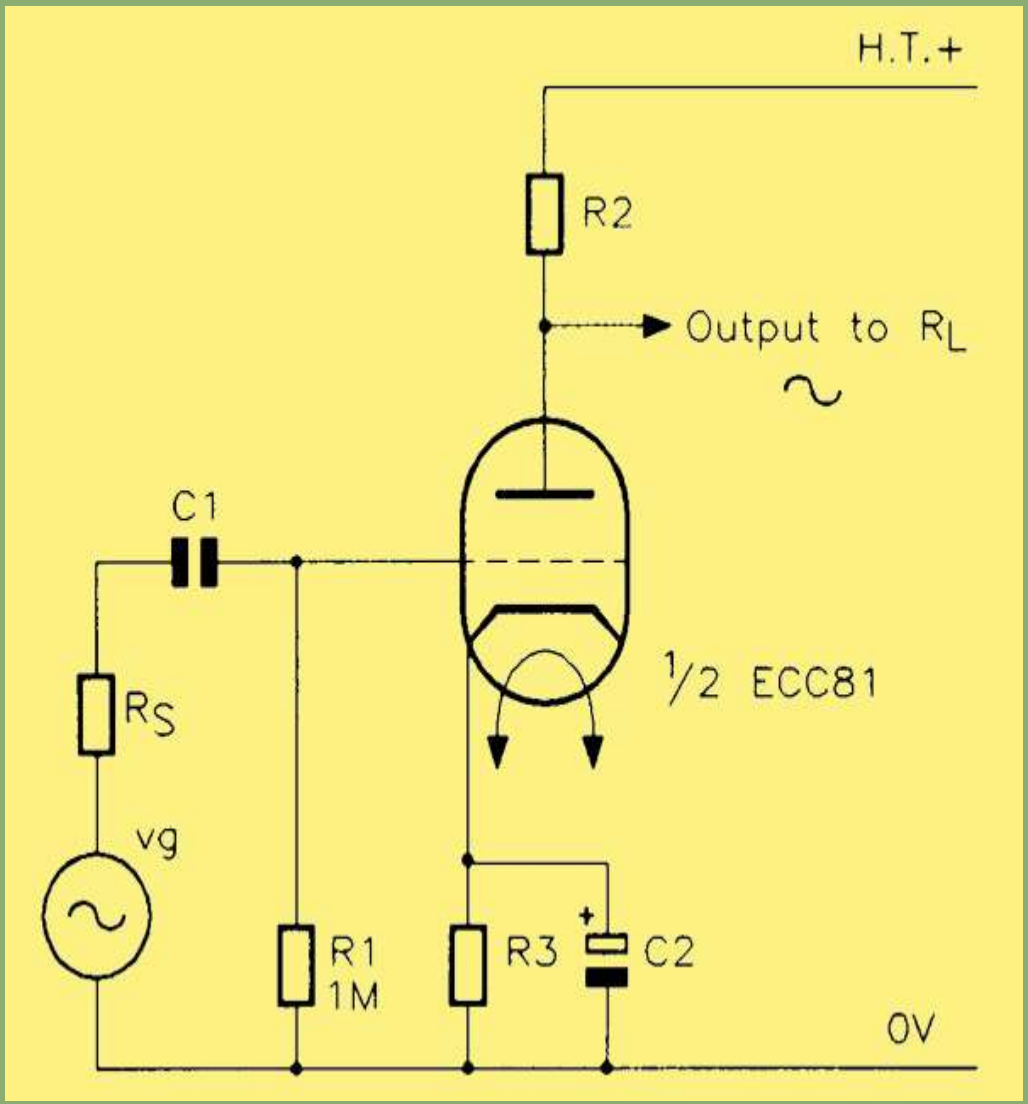

Basis for the design: circuit diagram for a single-stage triode amplifier.

It is a simple, single-stage voltage amplifier, which is assumed to be fed from a source of some impedance Rs, and whose output is to drive a load Rl. In this design we shall have to determine the values of the anode load and cathode bias resistors, R2 and R3 respectively, as well as the value of the input coupling capacitor C1 and the cathode bypass capacitor C2. The grid leak resistor Rl has the usual value of 1 MΩ.

If we are using the simple valve power supply presented in A Valve Power Supply, then the available DC output voltage will be approximately 150 V, and the amplifier design will have to take that into account as a limiting factor. Suppose that we know that the signal source will never provide a signal greater than 0.6 V RMS in magnitude. If the gain of the amplifier is 20 times, then the output voltage from the amplifier can never be greater than 0.6 x 20 = 12 V RMS. This we must convert to a Pk-to-Pk value in order to see how the signal swings fit in with the limit of 150 V total dictated by the power supply.

The relation between RMS value and the corresponding Pk-to-Pk value is given by:

Pk-to-Pk value = RMS value x 2√2 or 2 x 1.414

Which in this case means that the Pk-to-Pk output voltage

= 12 x 2.828,

= 34 V (approx.)

= 17 V peak.

This is apparently well within the range of the 150 V supply to be used. All we need do is ensure that the steady (no signal) value of the anode voltage allows the total swing of 34 V to take place without either signal peak approaching too closely to either 0 V or + 150 V. The easy solution is to set the steady anode supply voltage halfway between 0 V and the HT value, namely 150 V. This would give a steady anode voltage of 150/2 = 75 V. On positive half-cycles of the signal, the output level would rise to 75 + 17 V, which equals 92 V; on the negative half-cycles of the signal, the output level would fall to 75 - 17 V, which equals 58 V. Quite clearly there is a healthy margin in hand in terms of the voltage gap between each peak and the appropriate supply rail, as shown.

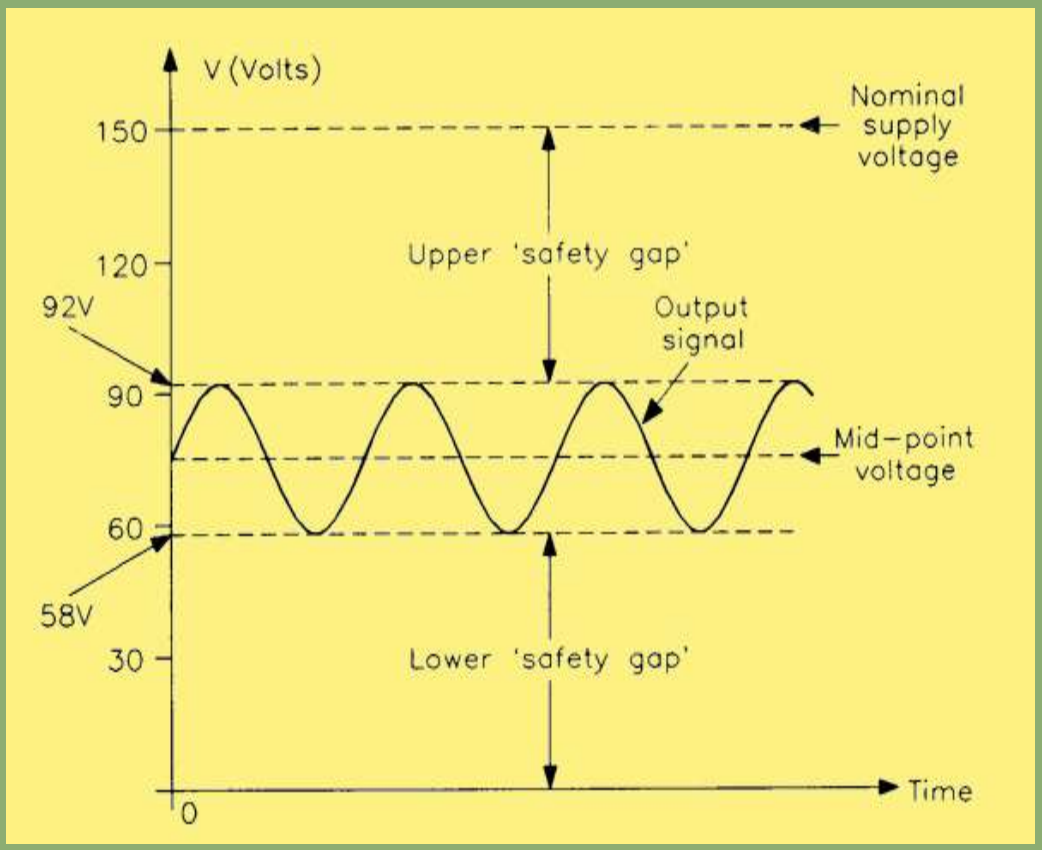

An essential step in amplifier design: setting the DC operating point. Choice of the mid-point ensures maximum symmetry of output but other settings are possible.

This should always be integral to any amplifier design. It might be tempting to assume that, in the case of this particular design, where the anode voltage is set midway between 0 V and HT +, that we could actually drive the amplifier so as to produce an output swing of 75 V peak, the anode voltage then rising to + 150 V on one half-cycle and falling to 0 V on the other. This is only theoretically possible however, the difference between theory and reality being that non-linearity of the valve characteristics would cause gross distortion to be produced well before these limits were reached.

It is not always either necessary or desirable to set the steady value of the anode voltage to half the supply voltage, just to ensure that the signal can be accommodated. As long as the signal swing does not closely approach either HT + or 0 V, a wide range of values for the choice anode voltage is possible. In particular design we shall set the value at about 100 V.

Calculations for the Anode Current and Anode Load

The steady value of the anode voltage is equal to the supply voltage minus the potential drop across the anode load resistor. Mathematically:

Va(DC) = VHT - (Ia x R2) - (Equation One)

If we substitute the known quantities into the above equation, we get:

100 = 150 - (Ia x R2)

The second term on the right-hand side, ie the product of anode current and anode load resistor, is unknown, or at least one of the terms within it, either Ia or R2, is effectively unknown, since knowing either of these would allow the other to be found by transposition! The question is, which one can be turned into a 'known' term?

One parameter that has been defined for this amplifier design is the voltage gain, which is required to be 20. The formula for voltage gain, or Voltage Amplification Factor (VAF) as it is alternatively known, for a triode is as follows:–

VAF = (μ x Rl) / ra + Rl - (Equation two)

The values for the above parameters for the ECC81 are typically ra = 13.5 kΩ μ = 54 at an anode voltage of about 170 V, rather higher than that used in this design. We can, at least initially, substitute these values into the equation for VAF, as well as the required value of VAF, namely 20, to give:

20 = (54 x Rl) / (13.5 + Rl) - (Rl and ra both in kΩ)

Transposing and simplifying, Rl = 270 / 34 = 7.94 kΩ

You may be saying at this stage that what we are interested in finding is not Req but R2, the anode load resistor. Yes, that is true, but in this design they are assumed to be the same thing. Since the load which the amplifier is driving is high, it has negligible shunting effect on the anode load and, hence, on the voltage gain. We can consider other cases later.

We should probably choose to use the nearest preferred value to the above calculated one, namely 8.2 kΩ, even though, in theory, this would give a gain slightly higher than that required. However, this is not of any real importance, since there is no guarantee as to the actual value of gm that the valve in use will have anyway, because the figure of 4.0 mA/V quoted in the data book is no more than a guide to the typical value, and production tolerance spreads will ensure that some samples will lie above this value and some below. In fact, I decided to use a 10 kΩ resistor for the anode load thus, hopefully, giving me a little gain in hand. You may get some flavour of how design goes in practice from this: you just cannot be too academic about it, because so often there are few parameters that can be tied down exactly, and flexibility and compromise often have to be used. We can now return to Equation one above and substitute into it the value

of R2. This gives:–

100 = 150 - (Ia x 10) (Ia is assumed to be in mA)

This must be transposed for Ia to give:

Ia = (150 - l00) / 10, = 5 mA.

This value of anode current is well within the capabilities of the ECC81, as can be seen from the mutual characteristics for this valve given in the diagram below.

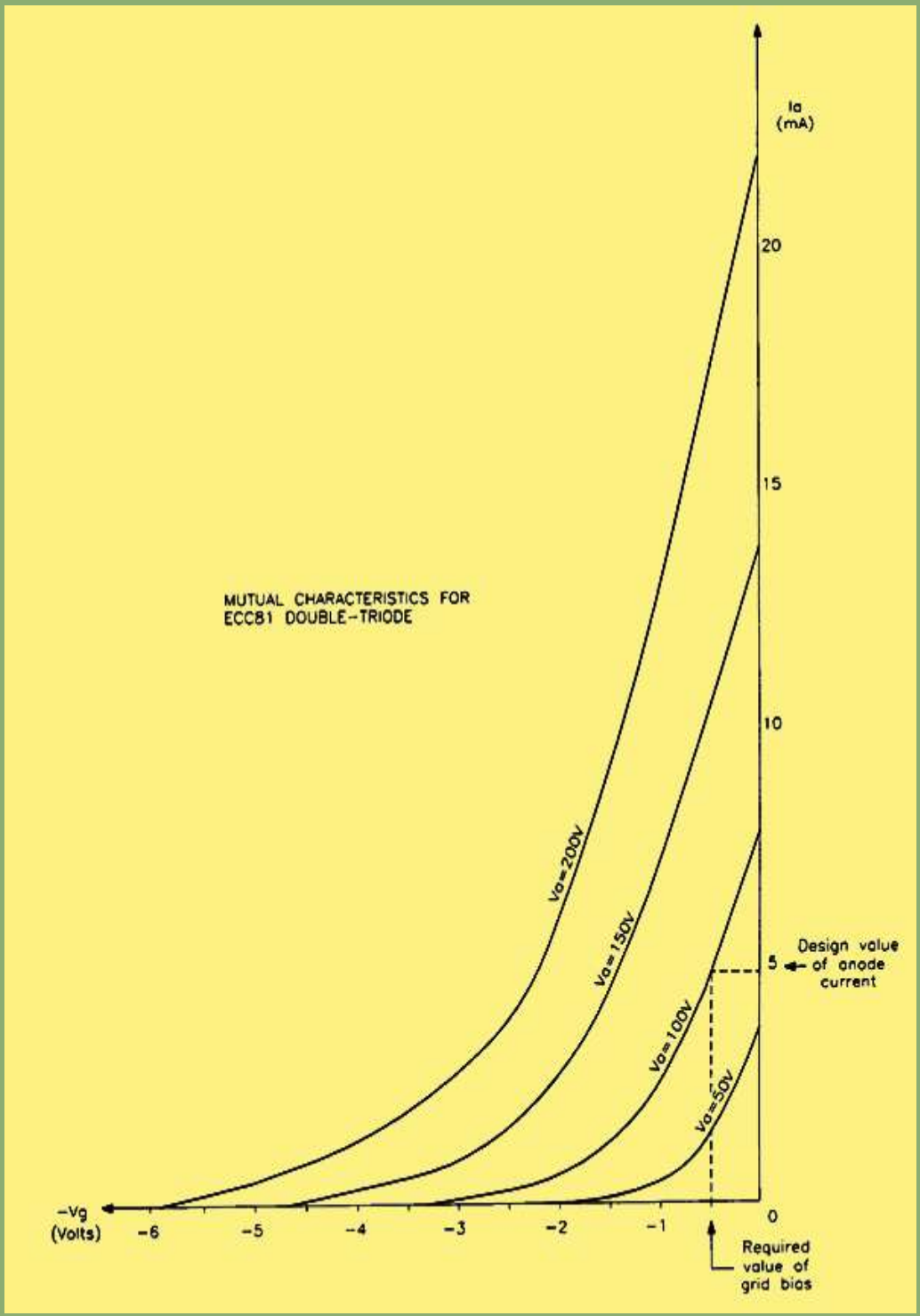

Using the mutual characteristics to determine the grid bias voltage.

Calculation of Cathode Bias Resistor

This is R3 in the circuit diagram at the top of the page, and its value is given by the following Ohm's Law equation.

R3 = (Bias voltage required) / (Anode current)

The value of bias voltage required is obtained from the mutual characteristics above, where the anode current value calculated previously, namely 5 mA, is projected across to the Va = 100 V characteristic and then projected down onto the -Vg axis. The value of Vg required is then found from this construction to be -0.5 V. The value of R3 is easily obtained now by dividing the bias voltage (0.5 V) by the anode current (5 mA) – convenient figures! – to give a value for R3 of exactly 100 Ω.

Decoupling the Cathode Bias Resistor

As is the case with common emitter transistor amplifiers, the resistor in the cathode lead (emitter lead) must be decoupled satisfactorily at all frequencies of interest. The rule-of-thumb method that allows the correct choice of decoupling capacitor to be made is as follows.

'At the lowest frequency of interest, the decoupling capacitor should have a reactance no greater than one tenth of the value of the resistor that it is to decouple'.

Using this rule, and with a bias resistor value of 100 Ω the decoupling capacitor should have a reactance of not more than 10 Ω, at the lowest signal frequency. Let us assume the latter is to be, say, 20 Hz. Using the formula for capacitive reactance, that:

$$Xc = 1 / (2\pi \times f \times C)$$

the value of C works out to be 796 µF

Rounding this up to 1000 µF should ensure satisfactory decoupling.

The Input Coupling Capacitor

It is fairly common practice at audio frequencies to use a value of about 10 n to 100 nF, usually the latter; on an old circuit diagram this would be marked as a value of 0.1 µF, which is just another way of expressing the same value. However, rather than just make this bald statement, which could even be regarded as something of a get-out, we should justify the value by calculation. Not only will this give us confidence in the choice we have made, but will also provide a basis for making alternative choices, given new criteria, should we want to do so.

The value of this coupling capacitor, C1 in the circuit diagram, is only important at low frequencies. Furthermore, at these frequencies the input capacitance of the valve, being very small, is of no significance and the

equivalent circuit of the amplifier input reduces to that shown

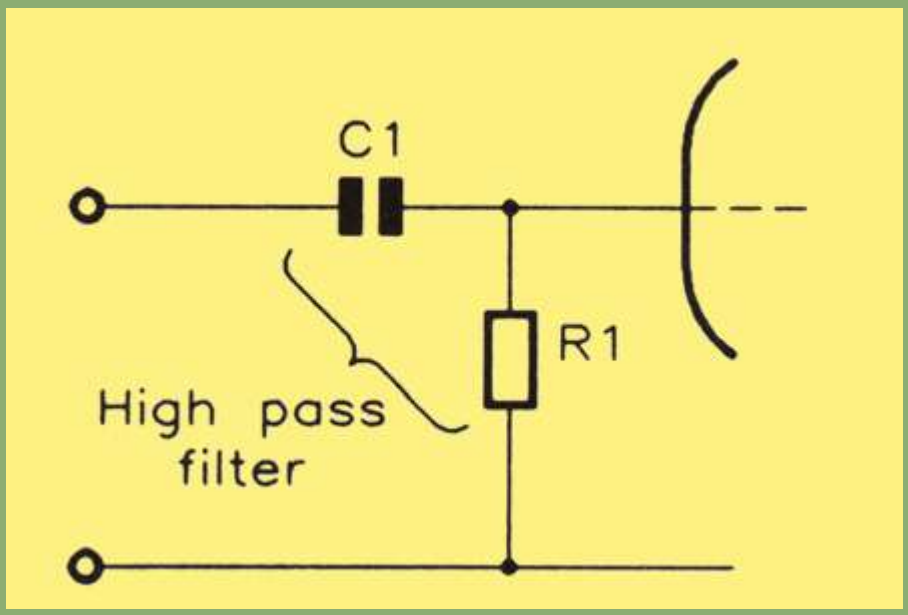

The input circuit of the amplifier as a high pass filter.

which is a high-pass filter comprising C1 and R1. At low frequencies, the reactance of C1 becomes of significance – the lower the frequency, the greater this reactance becomes – and there will be some particular value of frequency at which the reactance of C1 is exactly equal to the resistance of R1. At this frequency and under this condition, the loss of signal between input and output of this filter will be 3 dB. Since this is the usual way to specify the limits of amplifier bandwidth, if we know what the lower limit of band-width should be, we can choose such a value for C1 that no more than 3 dB of signal loss occurs at this frequency.

To take an example, suppose that the lower -3 dB frequency is to be no higher than 20 Hz then, at this frequency, the reactance of C1 should not exceed the value of R1, namely 1 MΩ. Using the formula for capacitive reactance in exactly the same way that we did when determining the value of the cathode bypass capacitor C2, we obtain a relationship as follows:–

$1\ M\Omega = 10^{-6}\Omega$

from which

$C = 1 / (40\pi \times 10^{-6})\ F = 0.008\ \mu F$ **(approx) = 8 nF**

From this result, it is obvious that a value of 100 nF more than meets the bandwidth requirement. This completes the basic design of the amplifier, and it now remains only to hook it up and test it.

Return to Series Contents or back to Currently Available Triode Valves or continue on to A Valve Power Supply

Return to Articles Contents Page

Valve Technology - A Practical Guide

A series of articles from 1993 by Graham Dixey C.Eng., MIEE republished by kind permission of Maplin Magazine.

A Valve Power Supply

Compared with solid state devices, valves need much higher voltages although at very much smaller currents. This reference is to the HT voltage, of course (HT = High Tension, as it was known). The heater supply will be 6.3 V at, often, several amperes. This requires a specialised transformer, which must have both a low voltage, high current winding for the heater supply, as well as a high voltage secondary winding for the HT. Such a specialised transformer was made available and could be found in the Maplin Catalogue of the time. This has a 240 V 100 mA secondary and a 6.3 V 1.5 A secondary. Thus it is capable of supplying the heaters of five valves if each is rated at 6.3 V 0.3 A, as are the double-triodes described earlier.

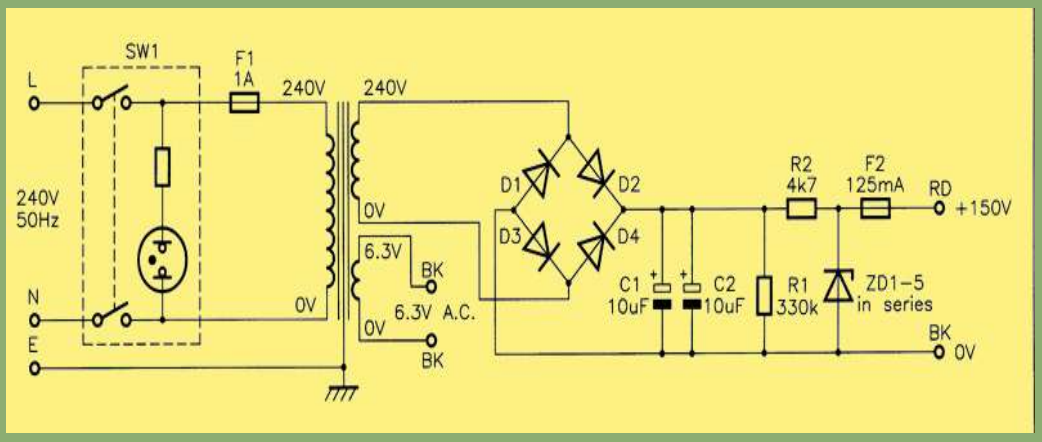

Circuit diagram for a simple stabilised power supply.

There are some fundamental problems in the design of valve-based equipment these days, due to the fact that much of the supporting hardware is simply no longer available. In the days when valve designs were current, appropriately rated capacitors were available in a wide range of values. For example, the reservoir capacitor for a valve power supply would have a value of about 16 µF with a voltage rating of 350 V DC or 450 V DC. Moreover, such a component would be quite large physically. Today, in the Maplin Catalogue, there is only one component that gets anywhere near matching this specification and that is a 10 µF 450 V DC item. However, on the plus side (pardon the pun) it shows that technology has apparently advanced such that this current item is a fraction of the size of its forebears (which used to be tall. aluminium cans mounted vertically on top of the chassis with the aid of capacitor clips, their tags made accessible beneath via a round cut-out); it is also very cheap. Thus the design uses two of these in parallel in order to get a total capacitance of 20 µF. The ripple rating of these capacitors is 280 mA. which is more than adequate for this modest design.

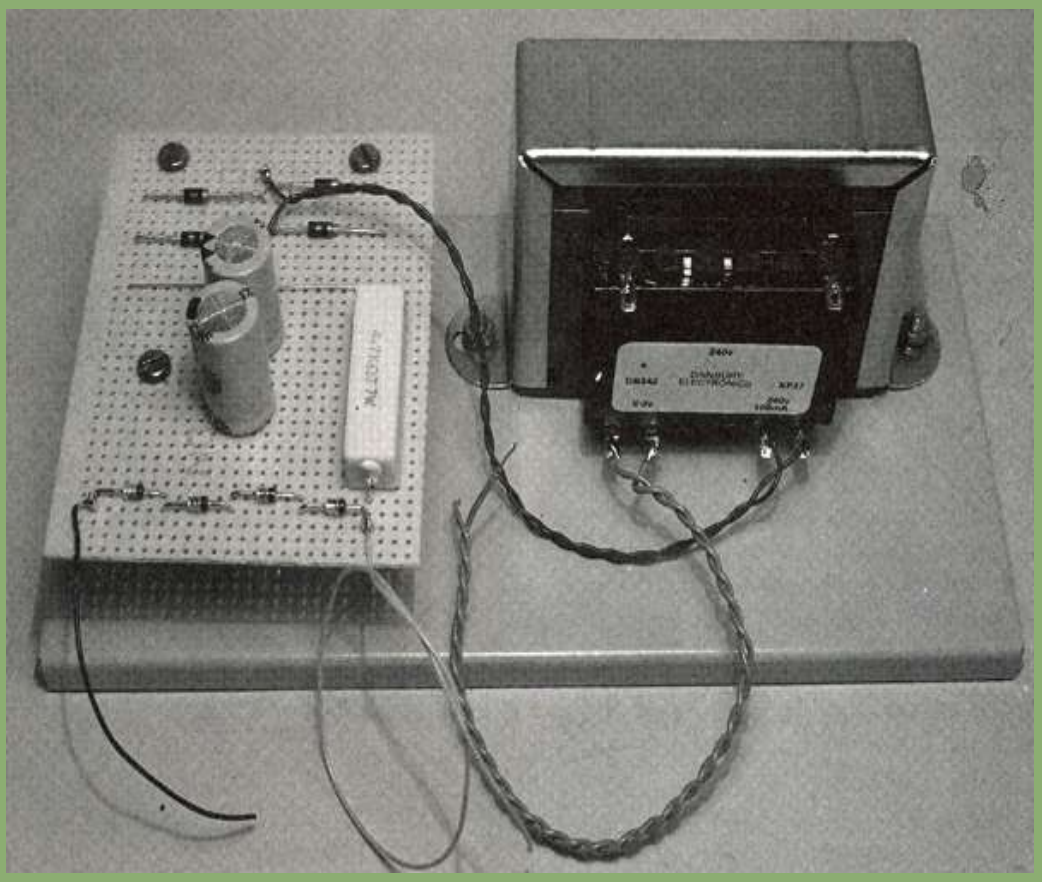

The valve power supply, with transformer and circuit board on sub-chassis.

The rectifier needs to have a voltage rating to match the 340 V peak secondary voltage available and. for this purpose, a bridge has been constructed from four discrete 1N4004 rectifier diodes, which are conservatively rated for this purpose. So far, the design yields an unregulated DC voltage of 340 V DC across the reservoir capacitor. It was thought that this was far too high for the experimental purpose for which it was intended. and so it was decided to add a simple shunt regulator using series-connected Zener diodes to perform two useful functions – dispose of the excess DC voltage and obtain a stabilised supply with a nominal output of 150 V. It was decided to use four 36 V Zener diodes. giving 144 V at the full-load output current of 30 mA. Although higher voltage Zeners are available. this would limit the possible output current further since all diodes in the available range have a power rating of only 1.3 W. The design of the shunt regulator means using a series resistor capable of dropping some 200 V at 36 mA (the extra 6 mA keeps the Zener diodes in conduction when full load current (30 mA) is being drawn. The calculated power rating is about 7 W and an appropriate wirewound resistor is used.

A case was chosen from the Maplin range, which had its own separate chassis. This is conveniently sized and allows the transformer and a small piece of matrix board (no copper strips) to be mounted in it and wired prior to installing it in the case and connecting it up to the case-mounted components.

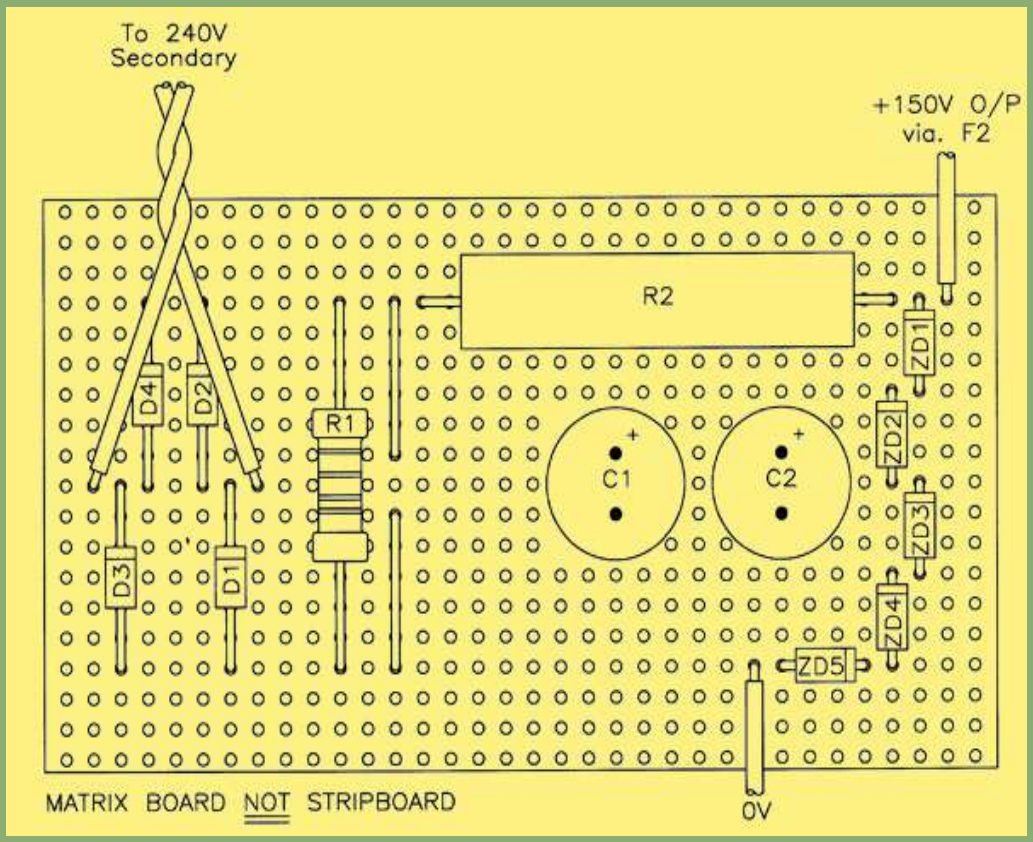

Layout diagram for the power supply circuit board. Component leads are hard wired on the underside of the matrix board.

The diagram above shows the layout of the circuit on matrix board, and the photographs show the layout used for the front panel and rear panel components, the latter being separate fuses for the mains input (1 A) and HT output (125 mA). A neon double-pole rocker switch is used for power on/off, and 'touch proof' 4 mm sockets are used for the LT and HT outputs. Use red and black sockets for the HT output and two black sockets for the LT output. The prototype used 4 mm terminal posts, but it is strongly recommended that 4 mm 'touch proof' sockets suggested are used for reasons of safety. It is also recommended that a high voltage warning label is applied to the unit.

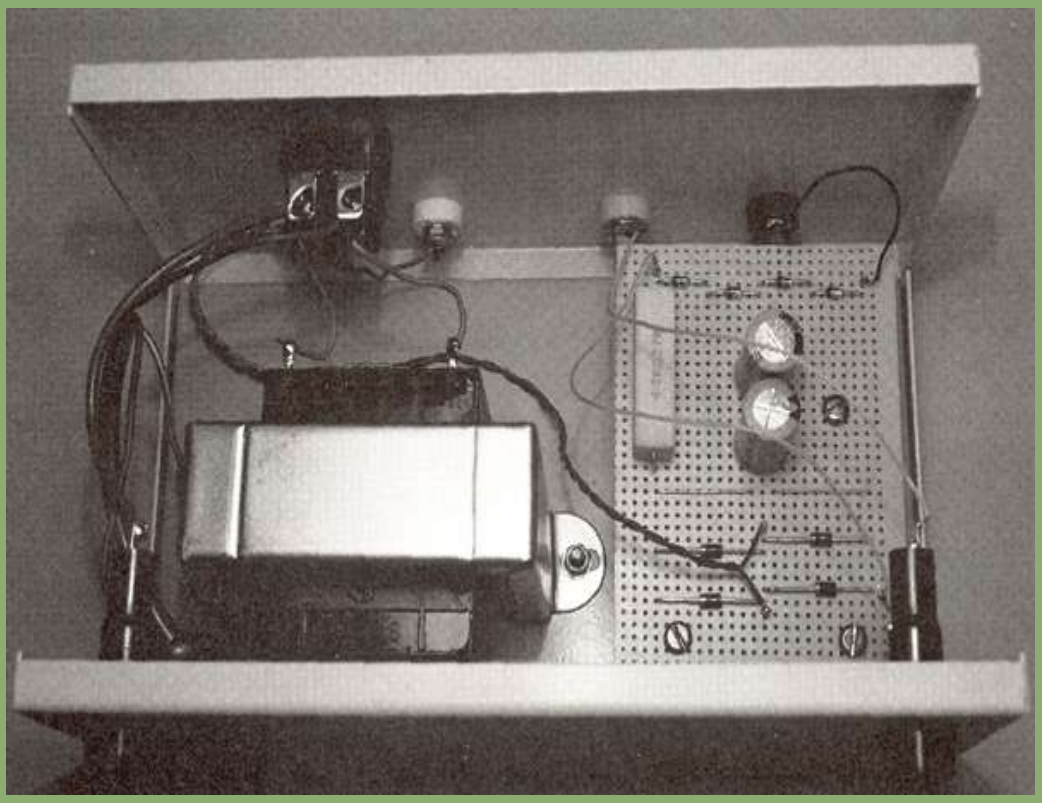

Interior view of DC power supply: note separate fuses for mains input and DC output.

It is important that the case and transformer are properly earthed, this can be achieved by using a solder tag; secure it to one of the transformer mounting lugs by means of a nut, bolt and shake-proof washers. It is important that any varnish is removed from the mounting lug so that a sound electrical connection is made. The incoming mains cable earth wire should be soldered to the tag. All connections within the PSU should be suitably insulated. The HT output is floating but the 0 V side of the regulated DC output can be earthed if required by strapping it to this terminal. Alternatively. a further front panel 4 mm terminal post could be added (connected to the solder tag) to allow earthing of the HT supply at will. To illuminate the neon in the rocker switch. the mains wiring should be made as shown below.

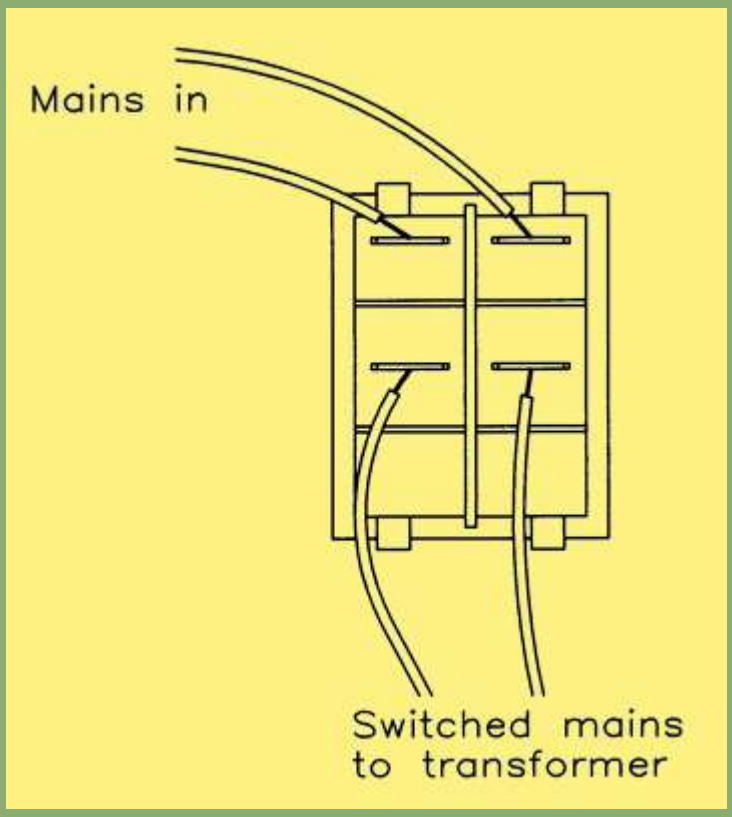

Wiring of the double-pole rocker switch. Connections must be insulated.

Output Ripple Voltage

The unit was tested when built and loaded to full capacity on the HT side by drawing the full-load current of 30 mA. The output voltage was measured as 144 V and the ripple at this loading was less than 0.2 V Pk-to-Pk. For the output voltage quoted this is less than 0.14 %. so is not of any significance. Note: The power supply is not designed for continuous use with the output unloaded.

PARTS LIST FOR THE POWER SUPPLY UNIT

RESISTORS			
R1	330kΩ 1W Carbon Film	1	(C330K)
R2	4k7 10W Wirewound	1	(H4K7)
CAPACITORS			
C1, C2	10µF 450V PC Electrolytic	2	(JL11M)
SEMICONDUCTORS			
D1-D4	1N4004	4	(QL76H)
D5-D9	Zener Diode BZ61C30V 1·3W	4	(QF64V)
MISCELLANEOUS			
T1	Tr. 240V/100mA, 6·3V/1·5A	1	(XP27E)
	Fuseholder 20mm	2	(RX96E)
F1	Fuse 20mm 1A	1	(WR03D)
F2	Fuse 20mm 125mA	1	(UJ75S)
S1	Dual Rocker Switch Red Neon	1	(YR70M)
	Shrouded Socket Red	1	(CK66W)
	Shrouded Socket Black	3	(KC49D)
	Blue Case 226	2	(XY46A)
	Matrix Board 0·1in. 39 x 29 holes	1	(JP54J)
	Nuts, bolts etc.	As Req.	

Miscellaneous hardware items to finish:
grommet, pillars, screws, cable clamp, solder terminals.
The Maplin 'Get-You-Working' Service
is not available for this project.
The above items are not available as a kit.

A Valve Regulated HT Supply

by Mike Holmes

The valve supply transformer used (Order Code XP27E) can deliver a greater HT level than the design above – up to 340 V unregulated – and a higher regulated output is therefore possible, ie. nearer the accustomed 250 V level, which is more practical for most working valve circuits.

An alternative regulator circuit that I developed into two variations is now presented. In keeping with the 'tradition', the circuit is, naturally, built

around a valve. The valve used is a Mullard ECL82, a triode output-pentode with a B9A base, once very commonly found in 'cheap-and-cheerful' record players, radios and radiograms.

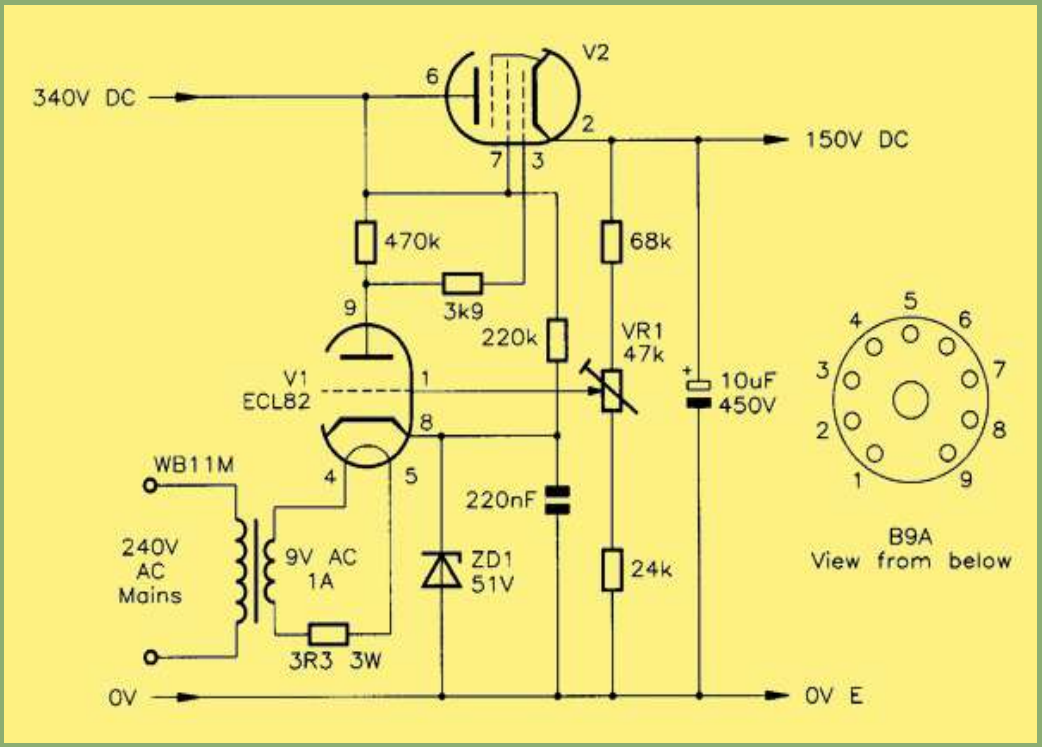

A 150 Volt valve regulator.

The circuit of the 150 V variation or the regulator is shown above. At first sight. this is somewhat confusing to follow. so the easier to understand transistor equivalent is shown below.

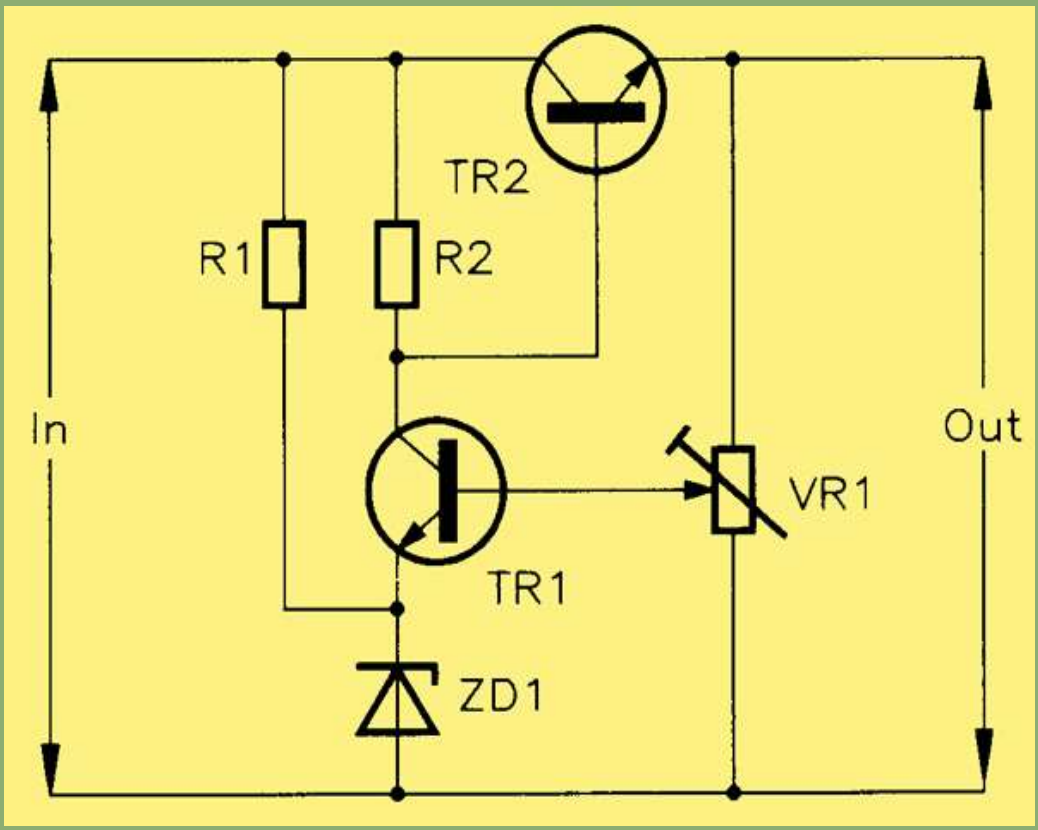

The transistor equivalent of the 150 Volt valve regulator.

As a thoroughly conventional supply regulator. it has three distinct stages: In the transistor circuit these are a precision voltage reference (ZD1 and Rl); a control amplifier (TR1 and R2); and a series pass element (TR2). VR1 taps off a proportion of the output to the inverting input of the control amplifier (base of TRl). Adjusting VR1 alters this ratio and, hence. is used to trim the output with reference to the precision source.

Transposing this arrangement to the valve circuit, you will see that the voltage reference is identical – being ZD1 provided with current from the unregulated HT via a 220 kΩ resistor. with any AC noise bypassed to 0 V by the 220 nF capacitor. V1. The triode section of the ECL82. is the control amplifier, with 470 kΩ resistor as an anode load. The series pass element is the power pentode section. V2. Here, the screen grid is directly connected to the anode, so it actually behaves as a high-current triode in cathode follower mode.

The circuit simply replaces R2. and ZD1 to ZD5, in the original design shown at the top of the page, where 340 V DC. connects to the plus side of C2 (10 µF) (where R2 used to be). VR1 is set to an approximate mid position prior to powering-up. and once warmed up and an output has been obtained. is used to trim the output to 150 V; as monitored by a voltmeter. The output can be up to 20 mA, and so it is ideal for small amplifiers requiring a smooth and steady supply, free of mains noise and fluctuations – useful for an audio preamplifier, perhaps?

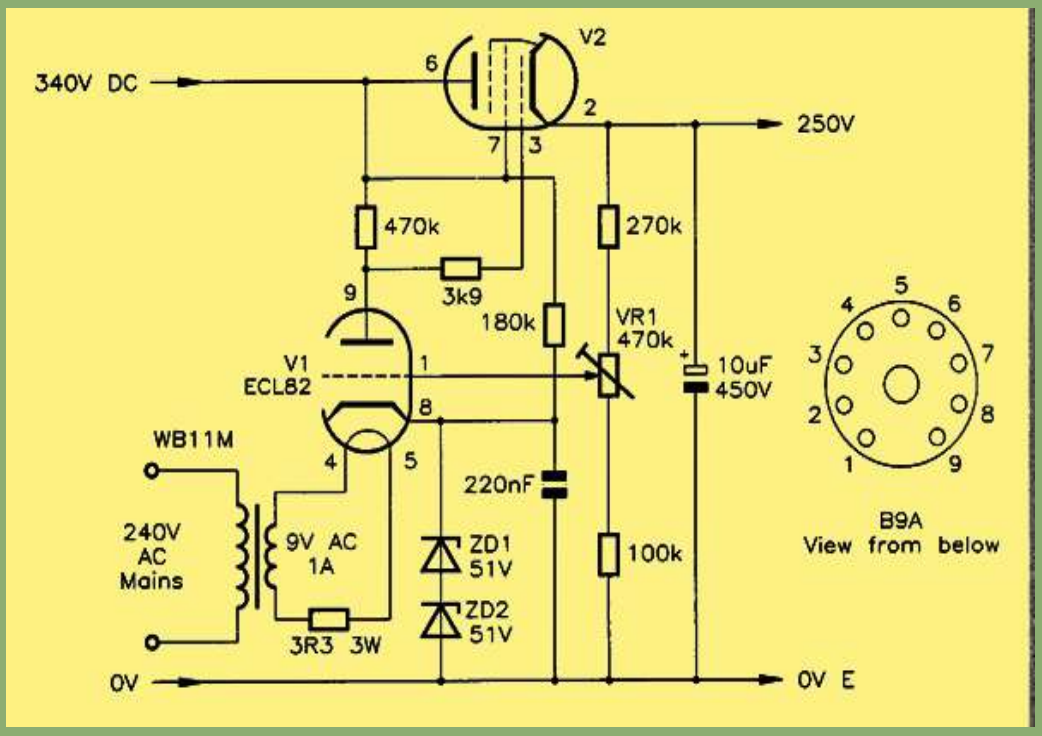

A 250 Volt valve regulator.

The design was taken further to produce the 250 V regulator shown above. There are only subtle changes to some resistor values, due to different voltage levels, and two Zener diodes used in series for a reference of 102 V instead of 51 V in this case, VR1 has more scope, and so the regulator can form the basis of a variable output power supply. All the resistors can be normal 0.6 W metal film types, and VR1 is an ordinary, enclosed preset. The 220 µF capacitor is a 250 V polyester type, and the zener diode is a BZY88C51V. Wiring-up around the B9A socket can be done with the help of a tag strip or tag board.

Of course, in the old days, Zener diodes did not exist, and so precision gas-filled tubes would have been used commonly known as 'voltage stabilisers' One experiment to duplicate this, using a wire-ended neon lamp in place of the Zener(s) (RX70M), proved quite successful. With the neon holding steady at about a constant 80 V.

The only real complexity that the regulator adds to the circuit is its heater power requirement. Unfortunately, it should not be taken directly from the main transformer's heater secondary; this is for two reasons. Firstly, the ECL82 draws 780 mA of heater current, which is most of the heater secondary's capacity (which is better employed heating several other valves!). But, more urgently, there is the matter of the large potential difference between the two cathodes of the ECL82. For the 150 V regulator, this will be 99 V; for the 250 V version, it will be 148 V: Between these potentials is the common heater circuit of the valve which, if connected to 0 V at some point, puts a stress between the cathode of V2 (pentode section) and its heater filament to the tune of the total output HT level! The way round this is to have a dedicated heater supply circuit, which must be fully floating. ie not earthed at any point. In this case, the average cathode-to-heater potential will be 49.5 V (150 V output), or 74 V (250 V output) for each section, which is much more survivable. A second mains transformer (WB11M) has two 9 V secondaries wired in parallel for a 1 A total output, and a 3.3Ω 3 W resistor in series, to drop the voltage down to 6.3 V

Return to Series Contents or back to **Design of a Triode Amplifier** or continue on to **Building the Triode Amplifier**

Return to Articles Contents Page

Valve Technology - A Practical Guide

A series of articles from 1993 by Graham Dixey C.Eng., MIEE republished by kind permission of Maplin Magazine.

Menu

Constructing the Triode Amplifier

There is a slight difference in the hook-up methods used with valve circuits compared with those using solid-state devices. The latter, because of their small size, lend themselves readily to stripboard construction. In contrast, the valve has to be plugged into a base, which is itself a relatively large component which must be physically attached to a panel with the necessary hardware. This is no great disadvantage, as in fact it provides a set of nine (in the case of B9A bases) useful wiring points. If a tagstrip is mounted nearby, then it is easy to hook up components between valve base pins and the tagstrip connections. To make life even easier, solder tags can be secured underneath the base mounting screws, so that ground connections can be made straight to the chassis.

An Experimental Chassis

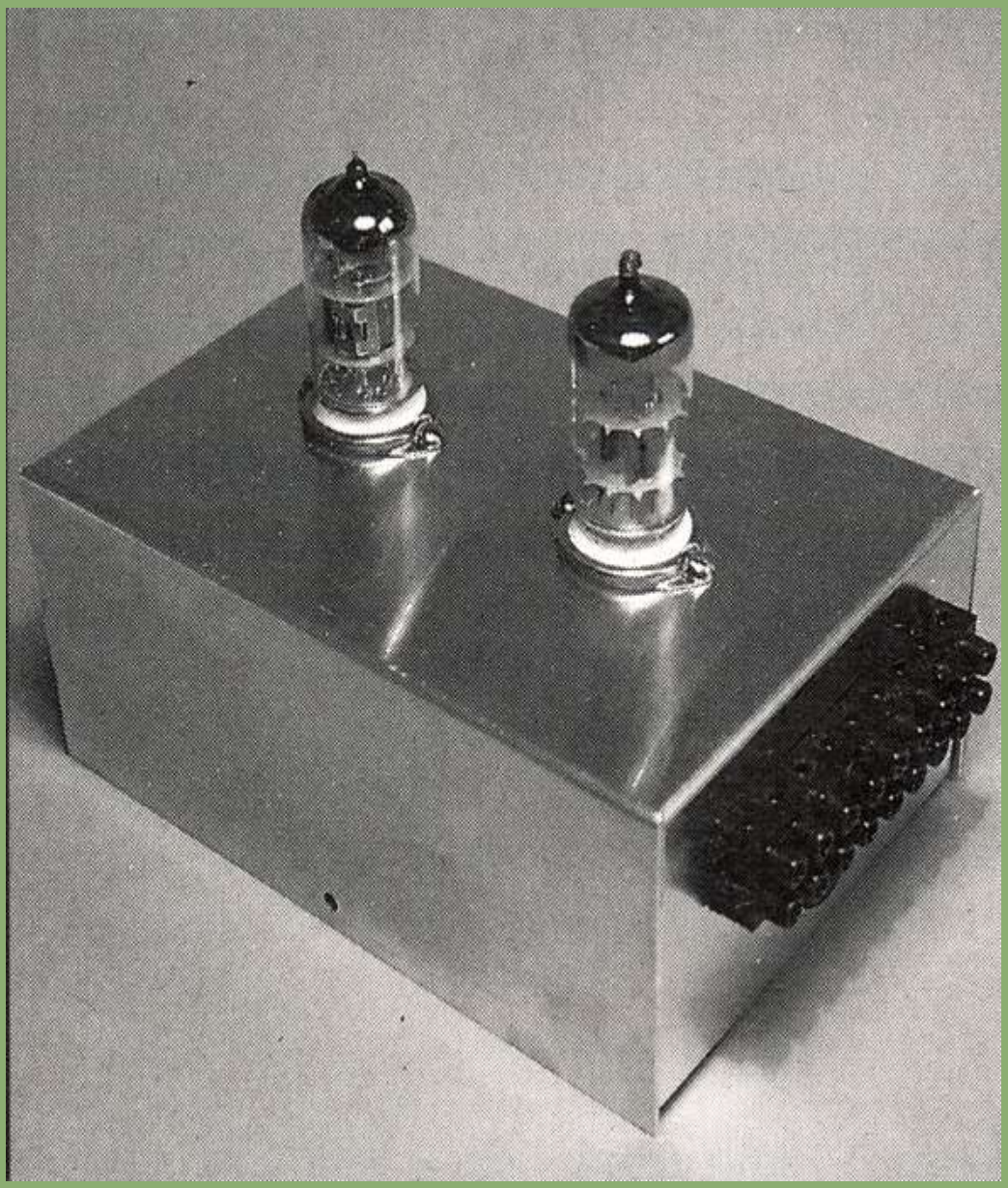

Completed chassis with valves in place.

While it is possible to build valve circuits on PCBs. it is more convenient (and more interesting) to use a more traditional aluminium chassis with round cutouts in the top for chassis mounted valve bases. A tag strip can be mounted inside (or a tag board on pillars) to allow circuits to be hooked up and modified without too much aggravation. A suitable able chassis exists (Order Code XB56L) and the photographs show how this has been used for the purpose described. It is worth buying a ready made chassis like this as it saves the chore of bending raw sheet into shape, which is not easy to do neatly without specialised bending tools. The B9A bases (Order Code CR31J) used for the valves require a 22.5 mm (7/8 inch) diameter hole to be cut in the chassis, which is easily done using a 'Q-Max' hole punch (Order Code BA68Y). This also requires an 8 mm Allen key to turn it, but if this is lacking it is possible to use a suitably sized box spanner and tommy bar.

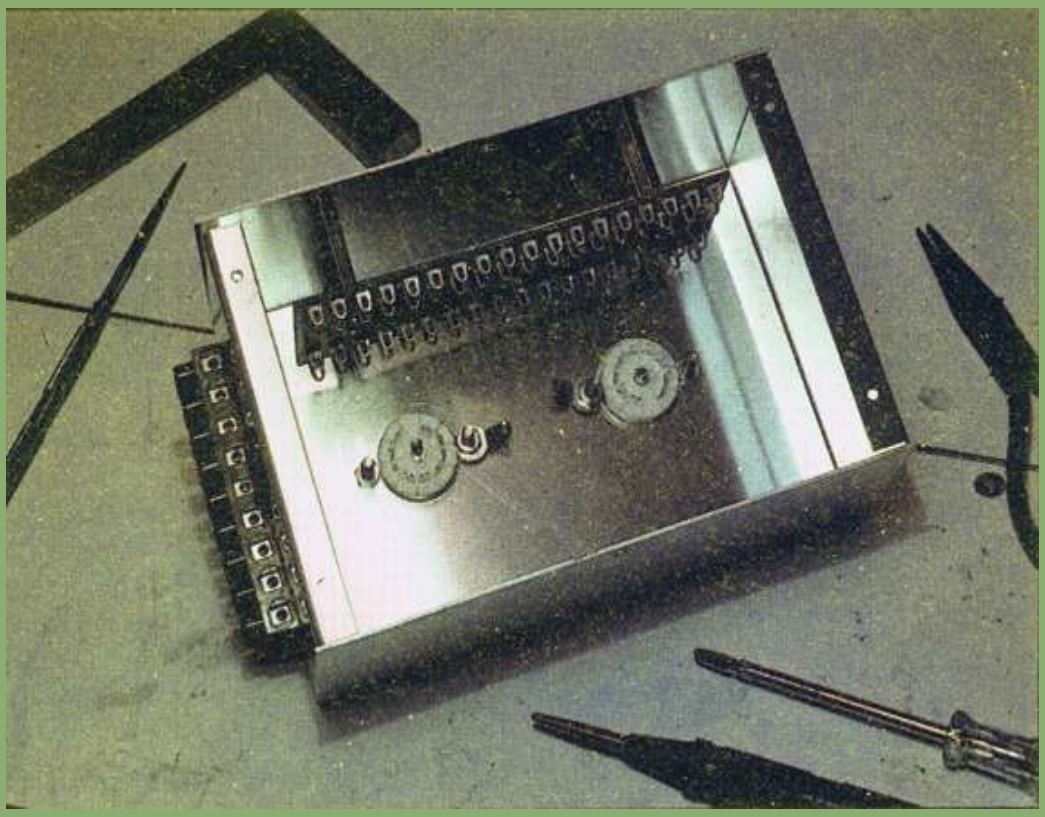

Underside view of experimental valve chassis, showing tagstrip for components and screw terminal block connector.

A tag strip on the inside of one long side allows for the mounting of components and as a 'jumping off point' for components or connections to the valve bases themselves. To take the power, both HT and LT, into the experimental chassis, a 'chocolate block' (screw terminal block) can be mounted at one end and the wiring run through to the interior of the chassis through a small hole, using a grommet for safety.

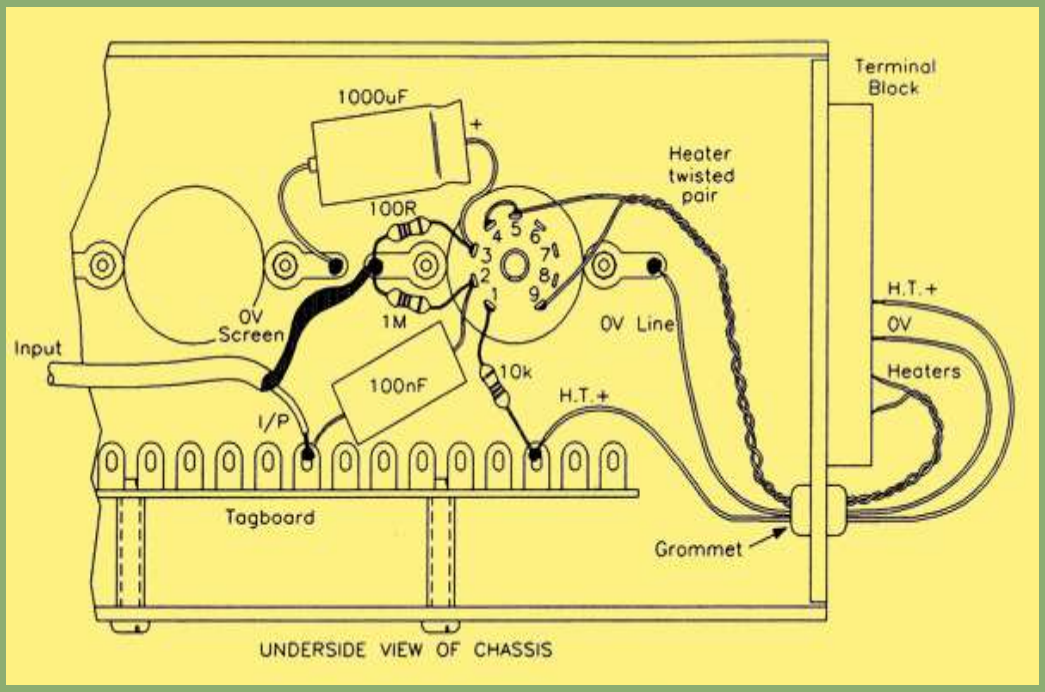

Component layout on experimental chassis for the triode amplifier design.

The diagram above shows the underside view of this chassis where the layout for the components used in this design can be: clearly seen.

It is usual when wiring up valve equipment to connect up the heater wiring first. This is always done in twisted pairs to reduce electromagnetic fields from the AC heater current. The terminal block at the end of the chassis can have a pair of terminals allocated for the heater connections, with a further twisted pair running from here back to the power supply. In the same way, a pair of terminals will also be allocated for the HT+ and 0 V connections, these running back to the power supply on suitably colour-coded wires. Although I used full wiring posts on my prototype power supply, the proper connectors to fit should be recessed 4 mm sockets, so make up 'proper' wire connections terminated in 4 mm plugs to connect at the power supply end, rather than simply using wires with bared ends!

The heater connections on the valve base are pins 4 and 5, with pin 9 as the centre-tap, but this orientation is for a 12.6 V heater supply: As explained in Currently Available Triode Valves, since we are using a 6.3 V supply, the two halves of the valve heater are connected in parallel. This is done by strapping pins 4 and 5 on the valve base together and running the heater twisted pair from the terminal block to the pins 4+5 and 9 respectively.

The HT connections were run so that one tag on the tagstrip was used for the +l50 V supply, while the 0 V wire was taken directly to chassis by way of one of the solder tags, as shown.

The grid leak resistor Rl is hooked directly between pin 2 of the valve base and a solder tag. Similarly, the parallel cathode bias and decoupling components are taken straight from pin 3 to a solder tag. The input capacitor C1 is connected between the tagstrip and pin 2 of the valve. The anode load resistor R2 is similarly connected between pin 1 of the valve and the tagstrip. It actually takes only a few minutes to hook up a circuit of this sort. Not only that but it is easy to make changes, substitute other components, and so on, because the disconnections and reconnections are accepted as satisfactory and AC testing was then carried out.

Measurement of signal gain was carried out with an input of 1.7 V Pk-to-Pk (0.6 V RMS) at the test frequency of 1 kHz. The output voltage was measured as 30 V Pk-to-Pk (13 V RMS).

Thus, the mid-band voltage gain (VAF) = 13 / 0.6, = 21.67.

This compares extremely well with the design value for the VAF of 20. The output waveform was extremely clean with no discernible distortion.

This was true over the full band-width of the amplifier.

In order to measure the bandwidth, an analogue electronic voltmeter was used to set up an output reference of 0 dB at 1 kHz. Without any further adjustment of input signal level, the frequency was first reduced until the output fell by 3dB. the frequency at which this was noted was 6 Hz. The frequency was then increased until, at some high frequency, the output again fell by 3dB. The frequency on this occasion was 130 kHz.

The bandwidth of 6Hz to 130 kHz thus more than covers the audio-frequency range and in practice it would be necessary to make the high-frequency gain roll off at a rather lower frequency. However, that was not the object of the exercise on this occasion.

Effects of External Loads

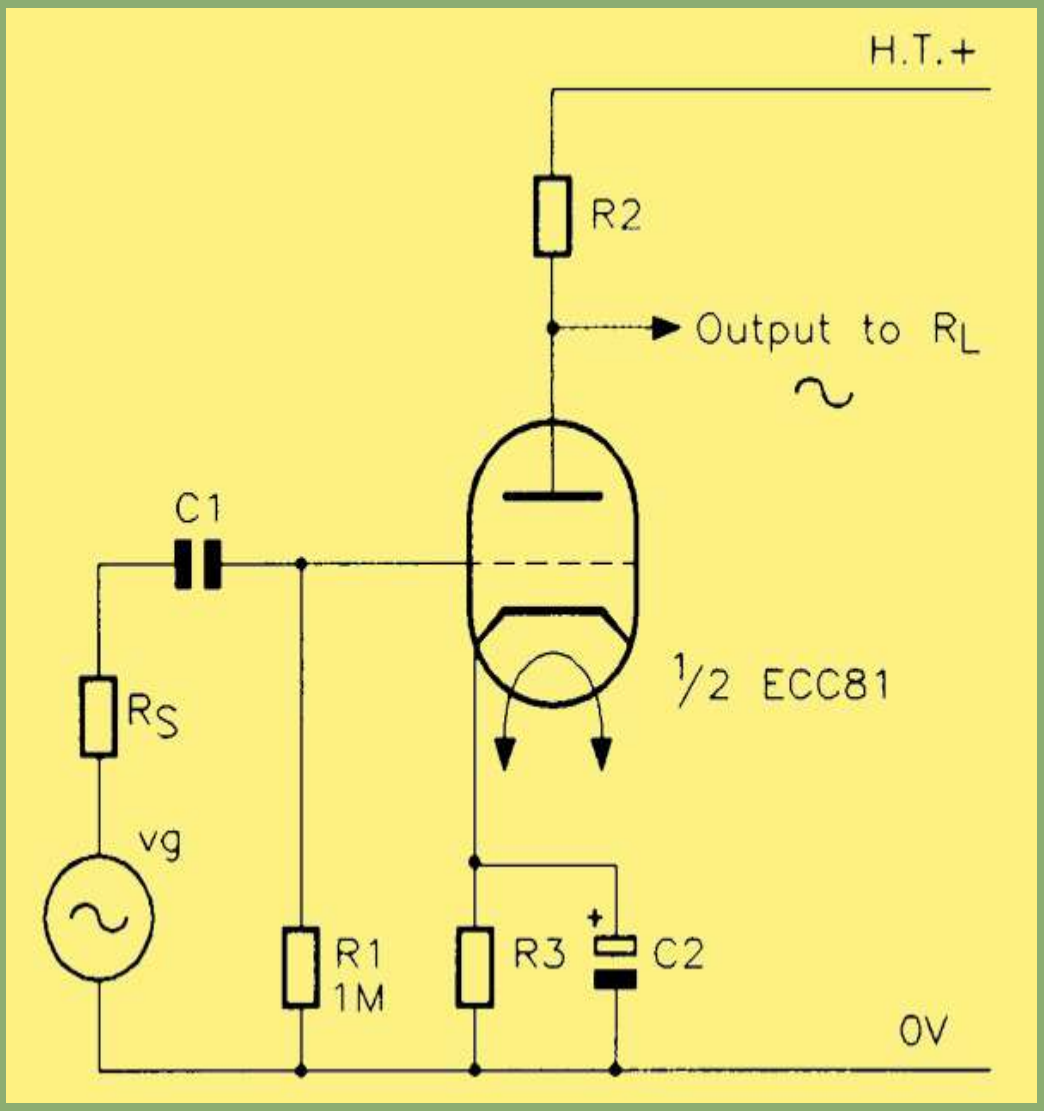

Basis for the design: circuit diagram for a single-stage triode voltage amplifier..

As shown above the amplifier is operating into an open circuit. While this may not be strictly realistic, it is not too far from what may be an actual operating condition. If the following stage was also a voltage amplifier of similar type, then its input impedance would be the resistance of its grid leak, at least up to the point where the input capacitance of the following stage started to be significant. Thus the 10 kΩ anode load would be looking into a 1 MΩ following impedance. This would have little shunting effect on the anode load and, hence, little effect on the voltage gain.

In any cases where the input impedance of the second stage was comparable to the value of the anode load of the first stage, then the effective load of the first stage becomes equal to these two impedances in parallel. In the equation for the VAF, these can be combined into a single equivalent term, Rl'.

Then:–

VAF = (μ x Rl') / (ra + Rl') - (Equation two a)

Alternative Expression for Voltage Gain

In Earlier in the series the VAF was stated as being given by the following expression:

VAF = gm x Req - (Equation Three)

This requires further explanation, especially in view of the fact that I have actually used a different expression for VAF (Equation two above) in the calculations for the gain of the amplifier – or have I? The truth is that the two equations are absolutely identical, merely two alternative ways of stating the same thing. This can be shown quite easily when we understand what Req means. It is, in fact, the parallel sum of ra and the anode load Rl. That is:–

Req = (ra x Rl) / (ra + Rl)

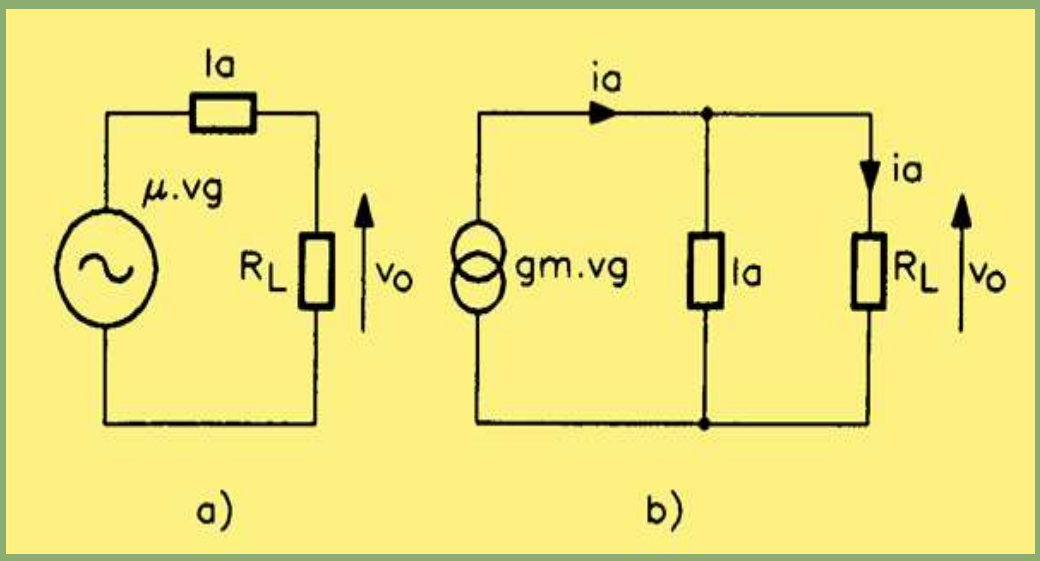

(a) constant voltage and (b) constant current equivalent circuits for a valve amplifier.

The diagram above shows two middle-frequency equivalent circuits for a valve amplifier. (a) is known as the 'constant voltage' circuit, while (b) is known as the 'constant current' circuit. The constant voltage circuit includes a voltage generator, whose value is µVg, feeding into ra and Rl in series. The voltage (Vo) across the load Rl is the output of the amplifier and, by proportion, will be as follows:

Vo = µVg x (Rl) / (ra + Rl)

If we divide both sides by Vg (the signal input), the left-hand side will be V0 / Vg, which is obviously the voltage gain, or VAF. What is left on the right-hand side once Vg has been removed will be recognised as the right-hand side of the original equation (Equation two). That should justify that equation; now for the constant current circuit.

The circuit of (b) may not look the same as that of (a) but it is directly equivalent to it. The voltage generator µVg feeding into a 'series' resistor combination has been replaced by a current generator gmVg feeding into a 'parallel' combination of the same two resistors. This time, instead of the output voltage dividing between two series resistors, the output current divides between two parallel resistors. The proportion of the total current that flows in Rl. produces the output voltage Vo by Ohm's Law. This current in Rl. is given by: gmVg(ra / (ra + Rl)), so that the output voltage will be as follows:–

Vo = gmVg x ((ra) / (ra + Rl)) x Rl

Again if we divide both sides by the input voltage Vg, the left-hand side will be equal to the VAF and the right-hand side will be equal to:–

(raRl) / (ra + Rl)

which is the parallel sum of these two resistance values, namely Req, as defined earlier.

What I have done here is to show that there are two different expressions for VAF, each taken from a different type of equivalent circuit. If you want to show that Equations two and three are equal, you can easily do so by using the relation that:–

μ = ra x gm

But I'll leave that up to you!

Return to Series Contents or back to **A Valve Power Supply** or continue on to **The Cathode Follower**

Return to Articles Contents Page

Valve Technology - A Practical Guide

A series of articles from 1993 by Graham Dixey C.Eng., MIEE republished by kind permission of Maplin Magazine.

Menu

The Cathode Follower

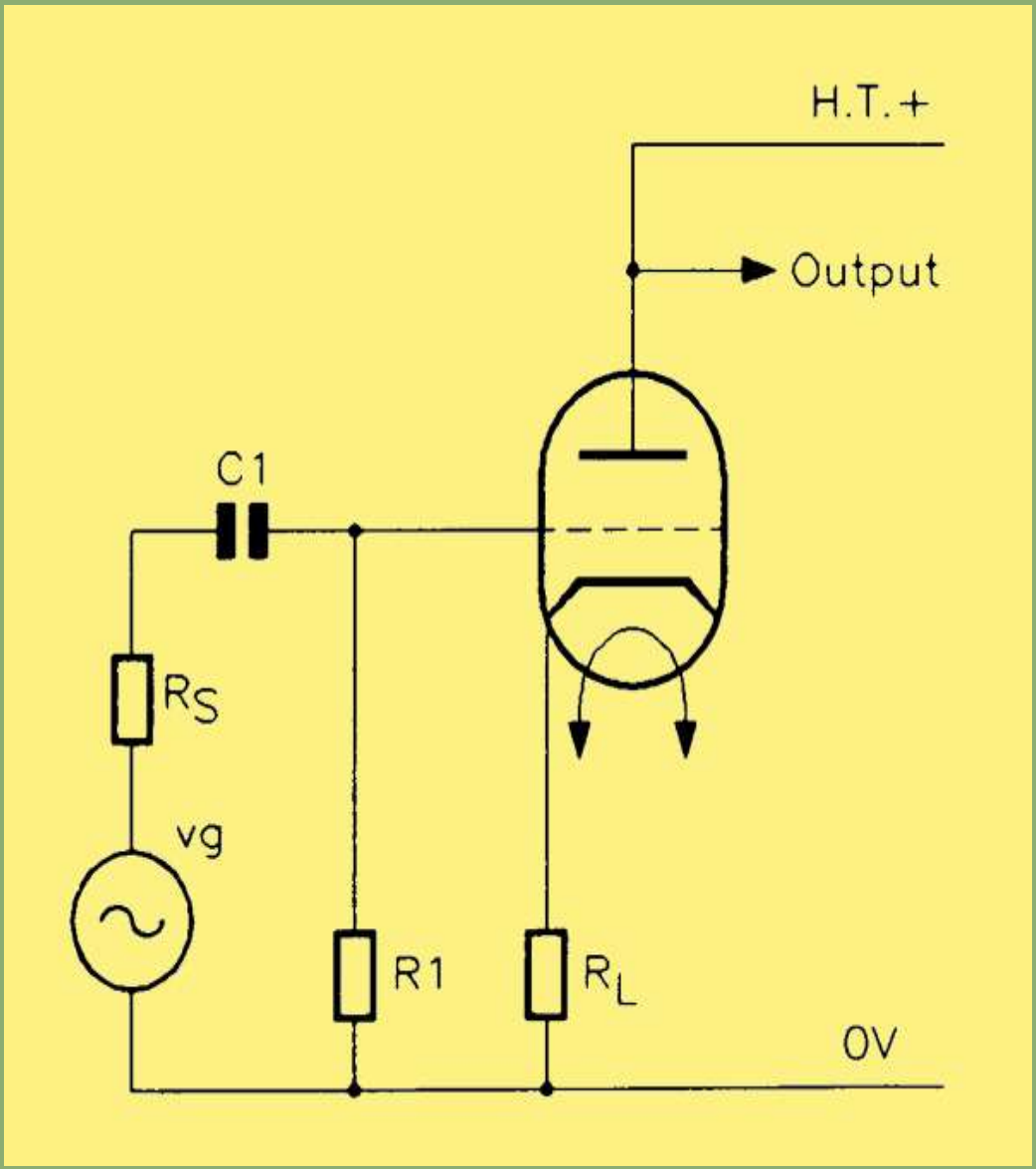

The cathode follower

This circuit, shown in above, is the valve equivalent of the emitter follower and has the same advantages. The load Rl. is in the cathode lead. The grid leak resistor and the input coupling capacitor are required as before. The grid bias voltage is derived in exactly the same way as for other valve amplifiers, by the DC voltage drop across a resistor in series with the cathode. However, since the value required for Rl might not be compatible with the resistor value calculated for the bias voltage, one or other of the two arrangements shown below may sometimes be used.

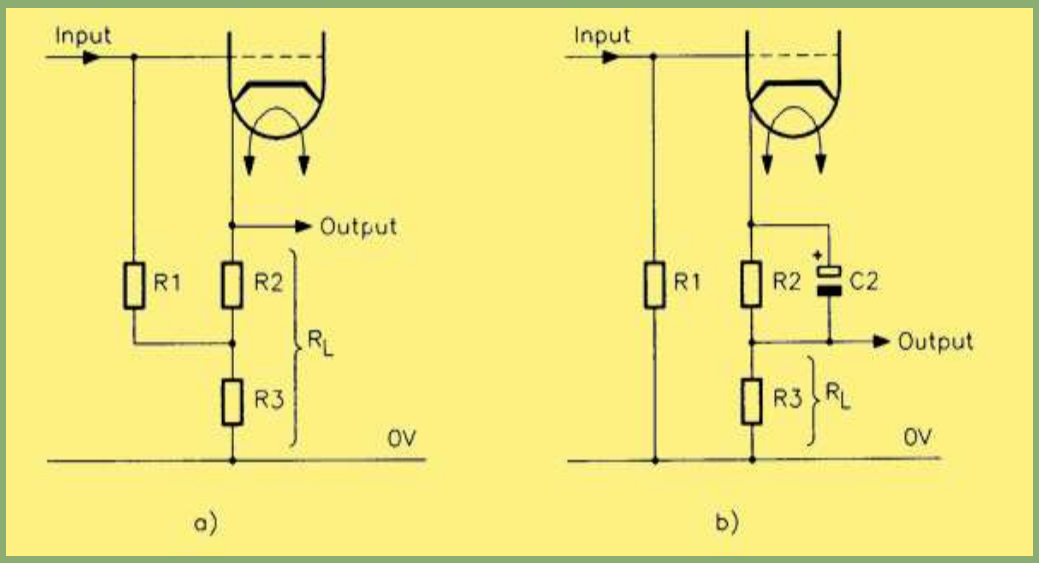

Biasing the cathode follower: (a) load value greater than bias value; (b) bias value greater than load value.

In (a) above, the load resistor comprises two resistors in series, (Rl = R2 + R3), because the value calculated for the cathode bias is less than that required for the load. In this case the DC bias voltage is developed across R2 and the grid leak is returned to the junction of R2 and R3 instead of to 0 V.

In (b), the load resistor has to have a smaller value than that required for developing the bias. In this case, the total resistance of R2 and R3 in series is used to obtain the bias voltage (grid leak returned to 0 V) and R2 is short-circuited to AC by capacitor C2 so that only R3 acts as the load for the amplifier. These latter arrangements are to be preferred to ensure that the output is not less than the input level, which is likely in the circuit at the top of the page.

The input impedance of a cathode follower is very high (though in practice it may be limited by the presence of the grid leak across the input), while the output impedance is very low. It is essentially an amplifier with l00% negative feedback, so the gain drops to less than unity while the bandwidth increases in inverse ratio.

A circuit was designed using the criteria that Ia = l0 mA; Va = 150 V, giving a grid bias voltage of -0.6 V (taken from the mutual characteristic for the ECC81). The value of cathode bias resistor calculated from this data is 60 Ω (0.6 V / 10 mA) and a standard value of 56 Ω was actually used. This is R2 in the circuit below.

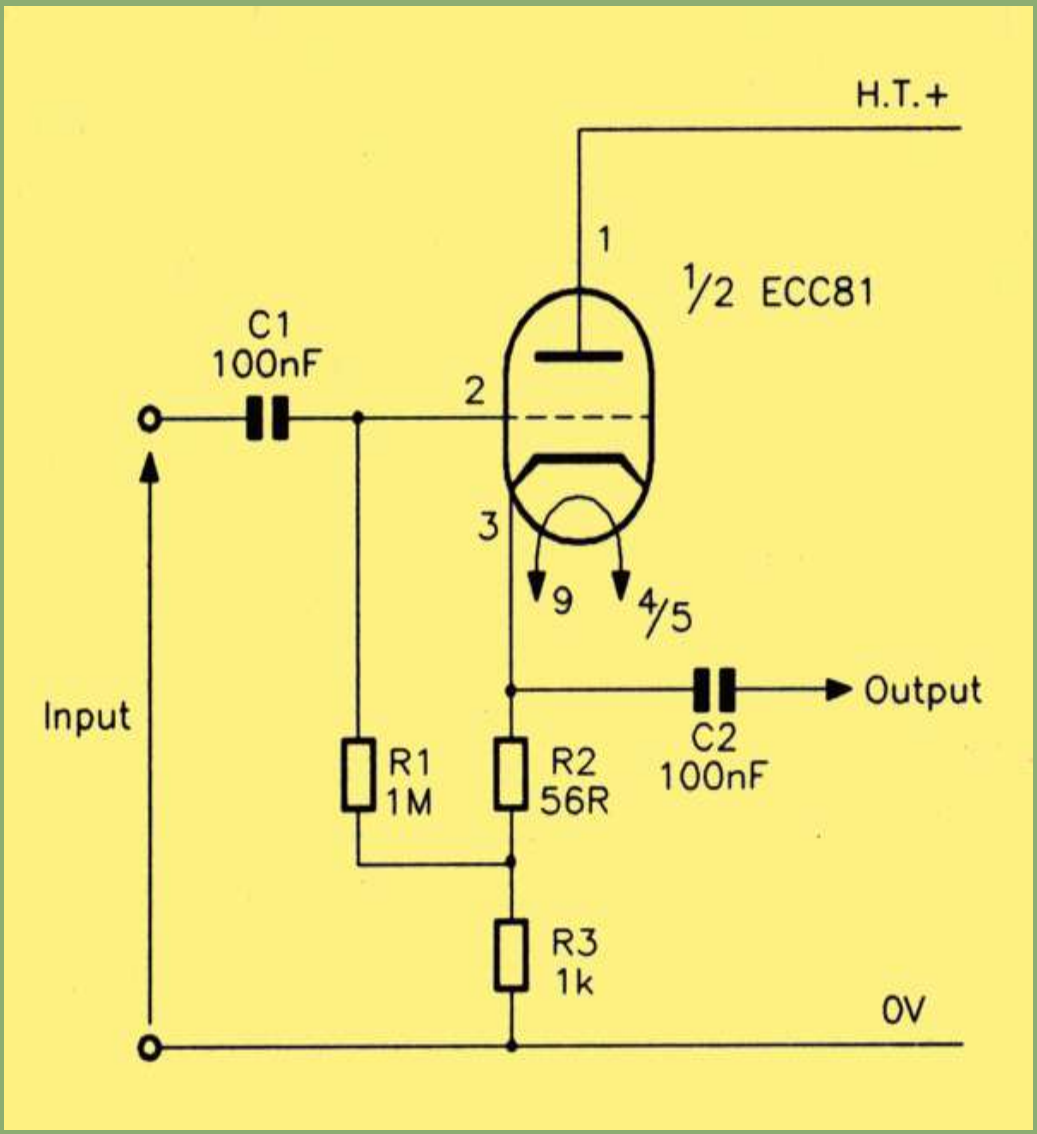

Design for a cathode follower.

To allow a reasonable signal swing, it was decided to set the cathode potential at + 10 V; thus R3 would need to be about 1kΩ in value. The circuit above was hooked up and tested. In practice, the anode current turned out to be 7.7 mA, setting the cathode potential at + 8.6 V. The gain was measured as 0.83 at the mid-band (1 kHz). The bandwidth was too wide to be measured with the available signal generator but, as an indication of how far the bandwidth is extended, the gain (relative to 1 kHz) fell by 0.6 dB at 5 Hz and by 0.4 dB at 500 kHz.

Return to Series Contents or back to **Building the Triode Amplifier** or continue on to **The Tetrode Valve**

Return to Articles Contents Page

Valve Technology - A Practical Guide

A series of articles from 1993 by Graham Dixey C.Eng., MIEE republished by kind permission of Maplin Magazine.

Menu

The Tetrode Valve

The tetrode was developed from the triode by the addition of another grid, which is situated between the control grid and the anode. This second grid is known as the 'screen grid' because it acts as an electrostatic screen between the two named electrodes. In .order that it can perform this function, the screen grid must be connected to ground (0 V) at signal frequencies. However, if it is connected directly to the 0 V line, then the resulting drop in potential that occurs in the electron path between control grid and anode will exert a force of repulsion on the electrons in transit to the anode. In effect, it would behave just like a second control grid, though at fixed potential.

The reason for including the screen grid at all is to reduce the value of the stray capacitance, Cag, between anode and control grid. The value of this in a triode is typically 2 to 10 pF. This may not sound very much, but at radio frequencies the reactance of this capacitance becomes so low that a significant amount of feedback can take place between the output (anode) and input (control grid). This may result in instability, thus effectively setting a limit on the use of the triode at such high frequencies. While there are techniques for 'neutralising' Cag and so avoiding unstable operation, it is more usual to employ a valve which has been designed so as to minimise the value of Cag, thus making higher frequency operation possible. The tetrode was developed for this specific reason and, while it is nothing more than a staging post on the way to a proper solution, it is worth knowing how such development came about, in that it will throw some light on other facets of valve theory. Apart from that, the development of the valve makes an interesting story in its own right.

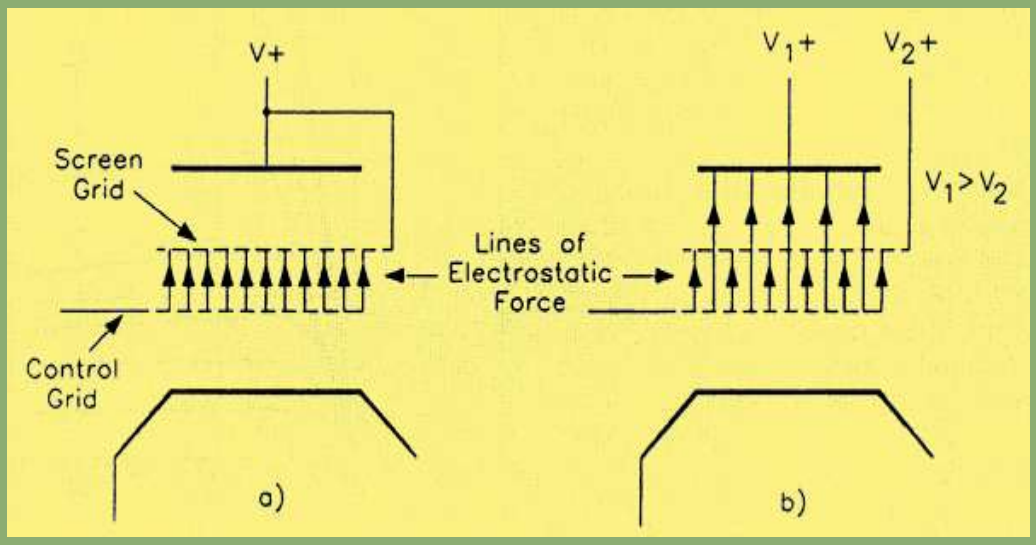

Lines of electrostatic force in a tetrode valve when (a) anode and screen grid are at the same potential; (b) anode is at a higher potential than the screen grid.

The action of the screen grid is as follows. Since it is connected to a positive potential, electrostatic lines of force will exist between it and both the cathode and the control grid, since the latter electrodes are at lower potential. Further, since its potential is, in turn, lower than that of the anode, there will also be electrostatic lines of force between the screen grid and the anode. In both cases, the direction of the lines of force is towards the anode. Since the screen grid has a positive potential, it seems reasonable that it would act, in effect, as a collector of electrons, rather like the anode. This is true; however, there is a significant difference between the construction of the screen grid and the anode. Whereas the latter is usually of solid form, eg, made as a cylinder from a pair of plates, the screen grid is of open mesh construction, like the control grid. As a result, the electrons moving towards both the screen grid and the anode will have such a degree of momentum that they will tend to pass between the open wires of the screen grid and continue on their way to the anode, where they will be collected in the usual way. Some electrons will, of course, be collected by the wires of the screen grid, giving rise to a flow of screen current, Is. As a result, the current flowing in the cathode lead is no longer the same as that in the anode lead, as it is in the case of triodes, but is equal to the sum of the screen grid and anode currents. Denoting the cathode current by Ik, we have the Kirchhoffs Law relation that:–

Ik = Is + Ia

This concept of lines of force between the various electrodes can be used to understand how the introduction of the screen grid reduces the anode-grid capacitance.

First of all a fundamental fact needs to be considered. If it is possible for electrostatic lines of force to exist between two conductors, then self-capacitance exists between those conductors.

Suppose that the screen grid and the anode were at the same potential. All the lines of force emanating from the control grid would land on the screen grid; none would reach the anode (a) on the diagram above. Consequently, there would be no capacitance at all between control grid and anode; the screening would be complete. Obviously, in this situation, because the anode and screen grid are at the same potential, there cannot be any lines of force between them. Thus, while there must be some stray capacitance between the control and screen grids (of no significance in this context), there will be none at all between control grid and anode. When the anode has a higher potential than the screen grid, as is usually the case, there will be some lines of force between control grid and anode (b) above, thus giving rise to a small value of Cag, but most of the lines of force arising from the control grid will terminate at the screen grid. The order of reduction in the value of Cag possible by introducing the screen grid is about 1000:1, a very real improvement. Typical values of Cag for tetrodes are in the range 0.001 pF to 0.02 pF.

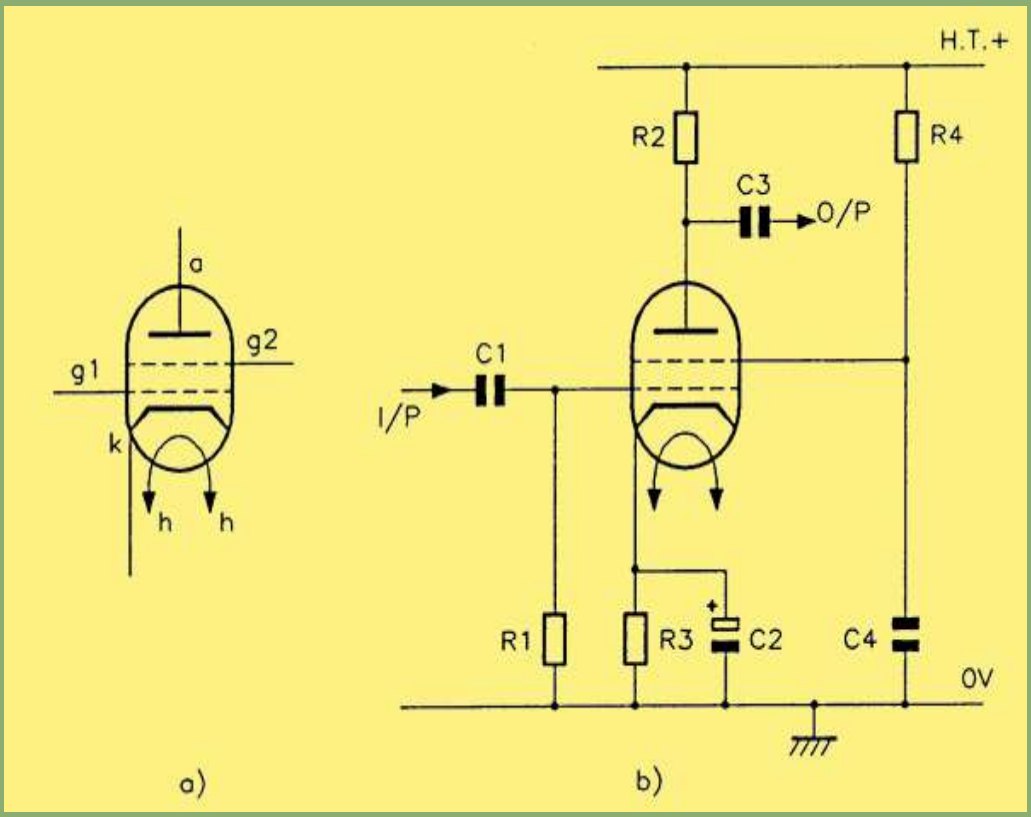

(a) circuit symbol for a tetrode valve; (b) circuit connection for a tetrode valve.

The image above at (a) shows the circuit symbol for a tetrode valve while (b) shows the circuit connection for such a valve. The actual screen voltage may be derived by means of a potential divider (with the lower section bypassed by a capacitor) or, as shown in the figure, by a series dropper resistor R4, with a capacitor C4 decoupling to 0 V in order to 'ground' the screen grid (as far as AC is concerned). Typically, the screen voltage is set at about two-thirds of the anode supply voltage, though there are, of course, exceptions.

Tetrode Characteristics and Parameters

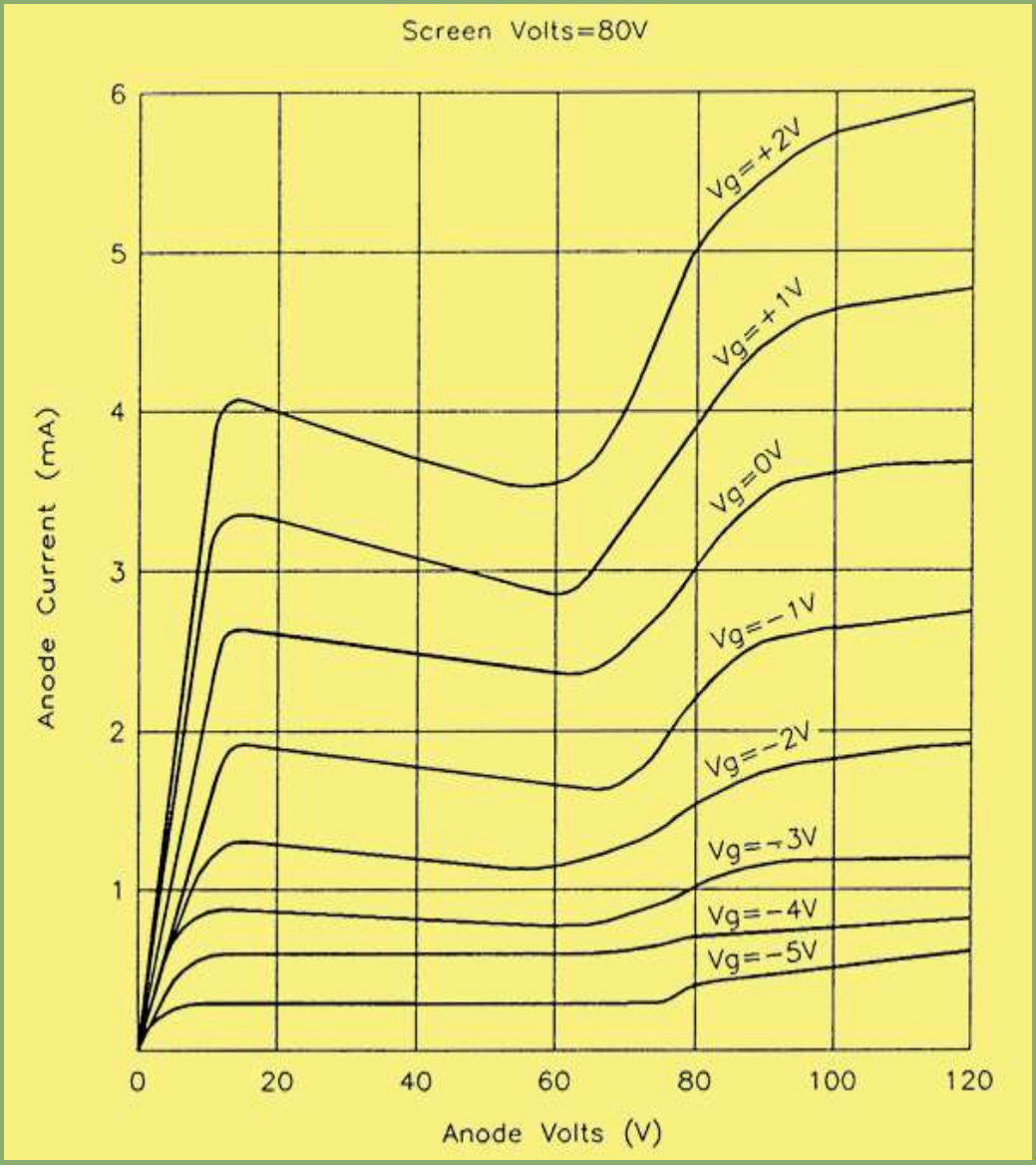

Anode characteristics for a tetrode valve.

Above is a set of anode characteristics for a typical tetrode valve, and it will be immediately apparent that these are dramatically different from those for the triode. Rising steeply and quite linearly at first, they then show a region of negative slope before rising again, this time in a non-linear fashion. The initial range of linear voltage/current variation is very limited in the example shown, terminating at a value of anode voltage that is slightly less than 10 V. By comparison, the region of negative slope goes up to about 60 V and has a significance that is not immediately obvious. Consider what is happening in terms of the voltage and current changes in the anode circuit over this range of anode voltage. The graph shows that, as the anode voltage increases, the anode current actually decreases. This may not be the sort of behaviour we would expect, but there is a good reason for it. However, before investigating such a reason, consider the value of anode slope resistance ra in this region.

We know that the value of ra is obtained by dividing an increment in anode voltage by the corresponding increment in anode current, these increments being taken from one of a set of anode characteristics of Va/Ia for various values of Vg, such as those shown in the curves above. Expressed mathematically:–

ra = (delta Va) / (delta Ia)

Which ever of the characteristics we consider, there is a substantial range of anode voltage and current whence, giving specific values for delta Va and delta Ia, we find that the increment delta Ia is negative. Thus, the quotient delta Va / delta Ia will, over this range, itself be negative. Since this is equal to ra, the latter will have a negative value of resistance over this range of anode voltage and current. While this has no real use when the device is used as an amplifier, it does

allow it to function as an oscillator of a particular type, since the implication inherent in the concept of a negative resistance is that, far from introducing the losses into a circuit that resistance normally does, it must actually be able to compensate for some losses in that circuit. This we know to be essential to the operation of an oscillator, since continuous oscillations can only be maintained when the losses inherent in the frequency determining components (whether LC or RC combinations) have been made good. An LC oscillator using a tetrode valve did exist, and was known as a 'dynatron oscillator'. The discussion of these implications from the shape of the tetrode's anode characteristics does not, however, explain how that shape arises in the first place of course. For that we must look at another phenomenon known as secondary emission.

Secondary Emission

Cast your mind back to Electron Emission, where we introduced the various methods for making a material emit electrons. The most common and easiest method, as was shown shown, is where the cathode surface of a valve emits electrons because of its high temperature; this makes it possible for some electrons to attain such high energy levels that they are able to escape from the material. However, this is not the only way in which electrons can be emitted from materials. Other methods include secondary emission, high field emission and photoelectric emission. The first of these, secondary emission, occurs in a tetrode valve, and it is this effect that is responsible for the curious shape of the anode slope characteristics seen in the tetrode curves, and which actually makes the tetrode unsuitable as an amplifier; it would seriously distort each negative half-cycle of the signal.

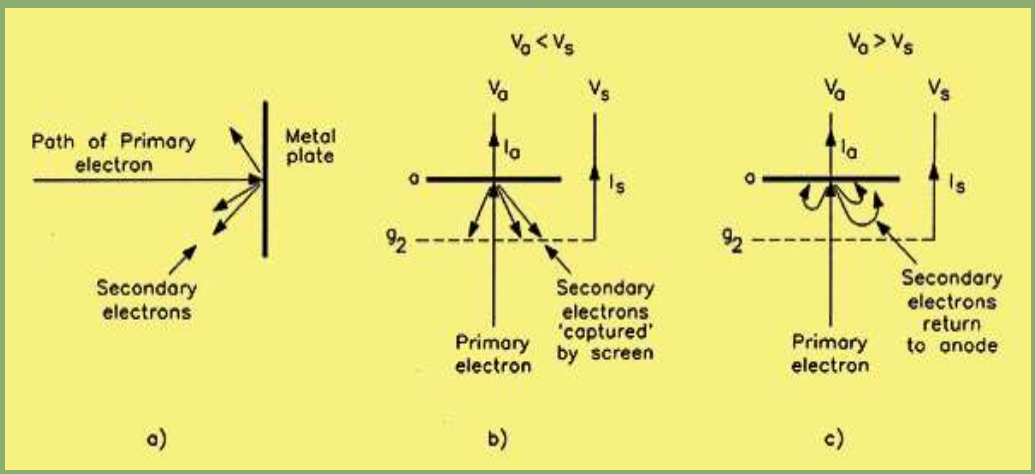

(a) the principle of secondary emission; (b) secondary emission in the tetrode when Va LT Vs and (c), when Va GT Vs.

When electrons strike a suitable surface at high velocity, secondary electrons will be emitted (a) above. This is true of both conductors and insulators. The number of secondary electrons emitted depends upon the velocity of the primary electrons striking the surface and the nature of the surface itself. As a rough indication, a pure metal surface may yield three secondary electrons for each primary one when the conditions are right. It is possible to fabricate surfaces that will produce figures of 10 secondary electrons per primary electron. Naturally, this would normally be done in circumstances where we wish to enhance the effect. Such is not the case in the instance of the tetrode valve. Here the phenomenon arises from the nature and the construction of the device and is quite accidental. What we need to consider is not how to make use of this secondary emission, but how to eliminate its effect!

In the case of the tetrode, there are two electrodes where secondary emission can occur. These are at the screen grid and at the anode, that is to say, either of these electrodes can be bombarded by primary electrons (originating at the cathode) to yield secondary electrons. What happens to these secondary electrons depends upon the relative potentials of screen grid and anode.

Suppose that, in the first case, the anode has a lower potential than the screen grid. The secondary electrons produced at the surface of the anode will be attracted to the screen grid; this will increase the flow of current Is in the screen grid circuit. If instead we assume that the anode has a higher potential than the screen grid, then the secondary electrons

produced at the screen grid will be collected by the anode, this time producing arise in the anode current Ia. These situations are illustrated in (b) and (c) above. This interchange of electrons between anode and screen grid is superimposed upon the flow of primary current between the cathode and these two electrodes. It commonly occurs at potentials of between 25 and 75 V. At potentials less than 25 V, the primary electrons have insufficient energy to produce secondary emission. At potentials greater than 75 V, secondary emission takes place, but the potential of the emitting electrode is high enough to attract the secondary electrons back immediately.

In a nutshell, then, where in the diagram of tetrode curves the anode voltage is less than 10 V, anode current rises in proportion to anode voltage. Between 10 and 70 V, secondary emission from the anode, by its being bombarded with what are now higher energy electrons from the cathode, causes an electron flow from the anode to the screen grid, 'stealing' a proportion of anode current, so anode current falls. When the point is reached where anode voltage is equal to the screen grid voltage this cannot happen, and then when the grid is less than the anode, secondary emission from the screen grid takes place, but is so small as to be practically insignificant, or is suppressed.

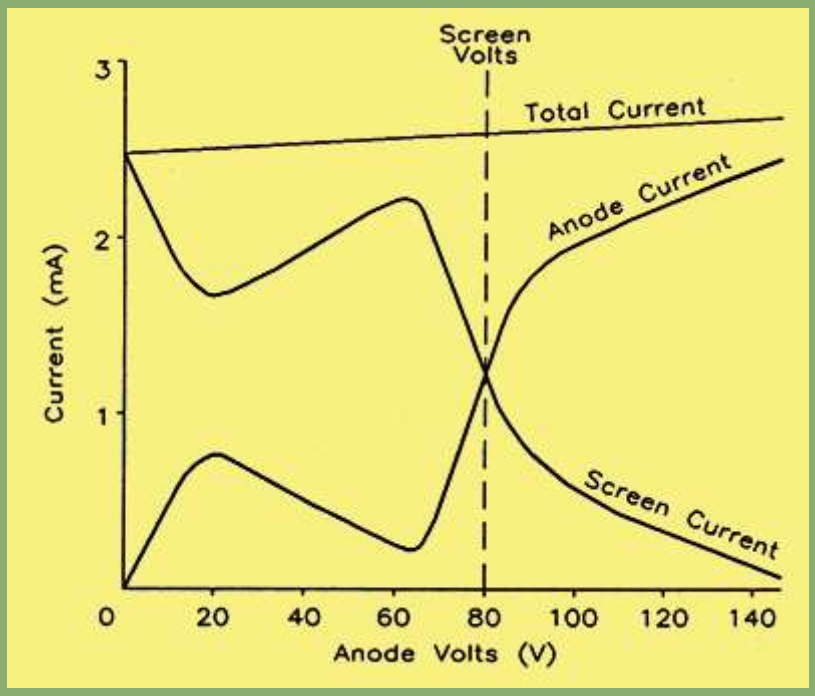

Variation of screen grid current and anode current with anode voltage for a screen grid (tetrode) valve.

The voltage and current relations can be seen more clearly in the above diagram. In this diagram, we have plots of all three valve currents against anode voltage as a common parameter. As we would expect from the previous discussion, the shapes of the anode and screen grid current curves are mirror images of each other. This being so, naturally the cathode current is a constant, since it is the sum of the other two currents. This cathode current is often known as the total space current. To be absolutely correct about it, as the curves show, the curve for this total space current is not quite horizontal but has a slight positive slope, showing that an increase of anode voltage does produce some increase in total current through the valve. A further point to note about the shape of anyone of the curves of anode current against anode voltage is that, once the anode voltage is greater than the screen grid voltage, the anode current is very nearly independent of anode voltage. This is an important characteristic – one that should cause us no problems, since the collector current and collector voltage in a bipolar transistor have the same form of characteristic once the collector voltage is past the 'knee' of the curve. However, in the case of the transistor, the knee occurs at a very low voltage value, a fraction of a volt in fact, and it is not difficult to avoid operation in this area. By contrast, the only way to use a tetrode as an amplifier with no significant distortion is if we ensure that the anode voltage never falls below the value of the screen grid voltage, a value that may typically be 80 V or more.

Advantages of Tetrodes. The primary aim of the tetrode is the reduction in the stray capacitance between output and input circuits of the valve. This object is satisfactorily achieved, and figures for the reduced values of Cag have already been given. Further advantages are higher values of the valve parameters, specifically μ and ra. Whereas the value of ra for triodes is usually only measured in tens of kilohms or less, the corresponding values for tetrodes are more likely to be of the order of hundreds of kilohms or even megohms. Even though gm may only be of the same order as for triodes, the product of a nominal gm and a very high ra naturally gives a very high value of μ the amplification factor. As a result, the voltage gain of tetrode amplifiers (and their derivatives) can be very much higher than in the case of triodes. What we have is not just a valve with extended bandwidth, but also one with superior gain. If only the distortion could be got rid of.

Return to Series Contents or back to The Cathode Follower or continue on to The Pentode Valve

Return to Articles Contents Page

Valve Technology - A Practical Guide

A series of articles from 1993 by Graham Dixey C.Eng., MIEE republished by kind permission of Maplin Magazine.

Menu

The Pentode Valve

The pentode, as the name implies, has five electrodes. Four of them are exactly the same as for the tetrode, but the extra fifth is called the 'suppressor grid', and it is located between the screen grid and the anode.

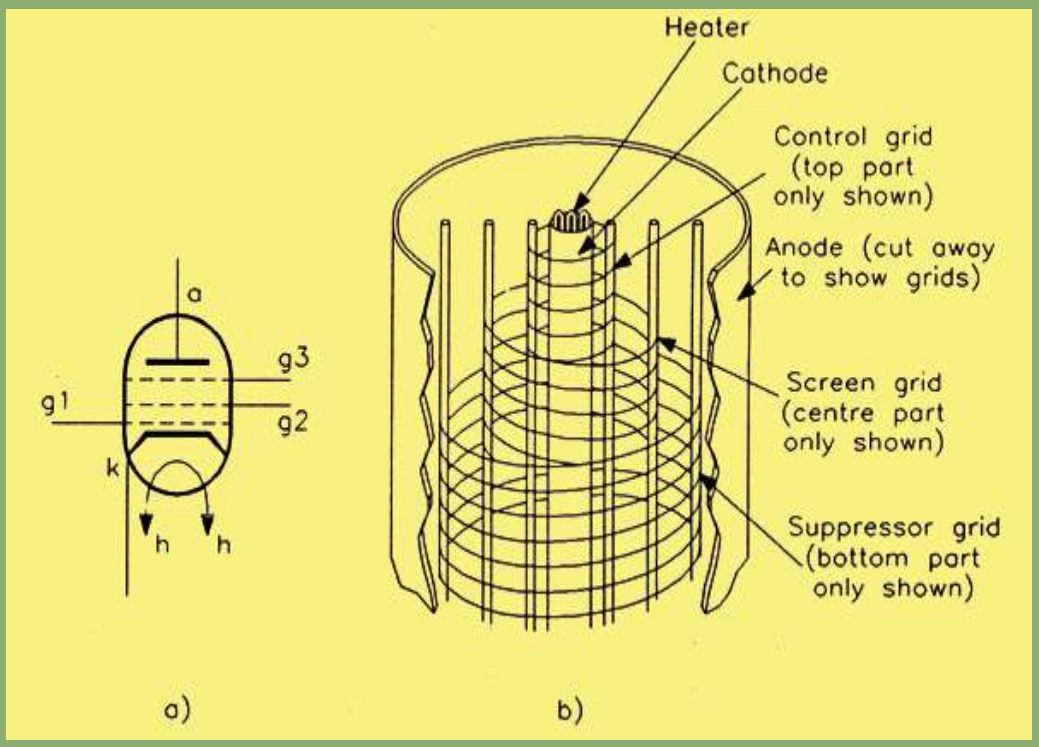

The pentode valve (a) circuit symbol; (b) physical construction.

The circuit symbol and physical construction for a pentode valve are shown. The suppressor grid is usually connected directly to the cathode, often internally within the valve envelope, but some times an external connection is allowed for. The function of this additional grid is to create a lower voltage region (a negative electric field) between the screen grid and the anode, and this prevents the interchange of secondary electrons between these two electrodes. As a result, the pentode retains the advantages of the tetrode in terms of its high amplification factor and ability to operate at high frequencies, but the kink in the anode characteristic is totally eliminated!

Alternative Terminology for the Grids

We have now met the most complex valve type that we shall be talking about in this brief series. We know that it has three grids, which are termed the control grid, the screen grid and the suppressor grid. Each of these is a bit of a mouthful for constant repetition, so it is common to refer to them simply as: the grid, screen and suppressor, respectively. However, when it comes to annotating valve base diagrams, even these abbreviated titles occupy too much space and an alphanumeric reference is used instead. In

this system, the three grids are called gl, g2 and g3, respectively. These symbols, together with h for the heater, k for the cathode and a for the anode are used in the base diagram for an EF86 pentode shown below.

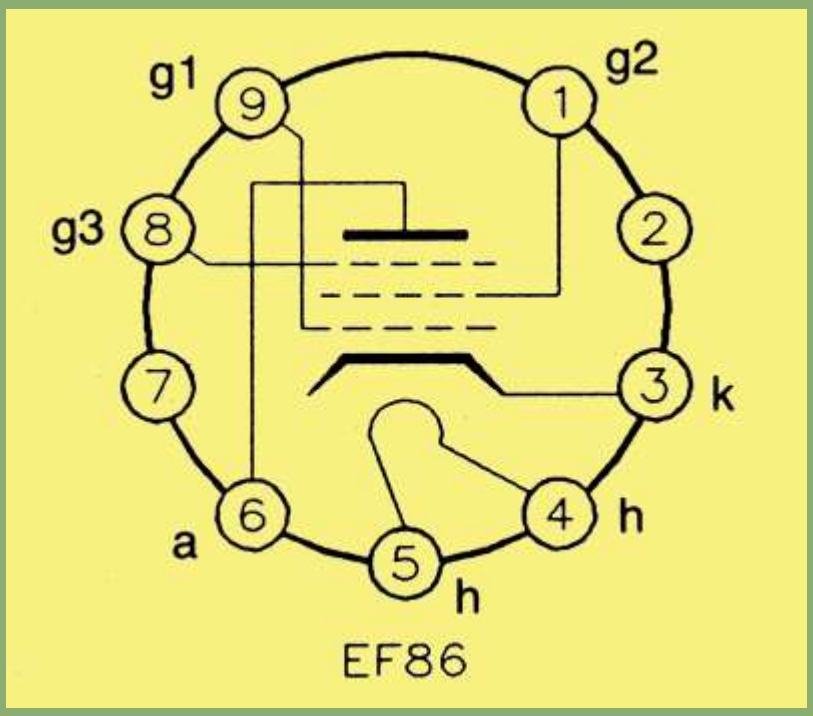

Base diagram for the EF86 pentode.

Pentode Characteristics

Mutual and anode characteristics for the CVl38 (EF91) pentode valve are shown below.

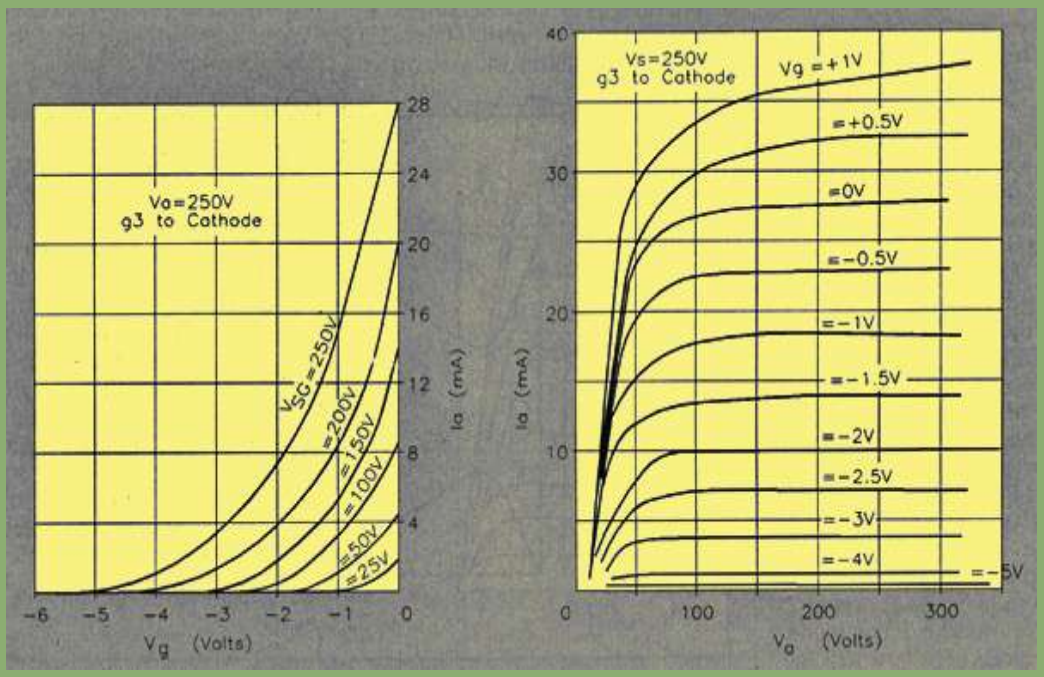

(a) mutual characteristics and (b) anode characteristics for the EF91 pentode valve.

Note that these are typical curves for the conditions stated. The screen volts are set fairly high at 250 V and the suppressor is strapped to the cathode. The mutual characteristics show that this valve is what is known as a short grid base type, by which is meant that a relatively small negative grid bias voltage is required to cut it off, even with quite high anode potentials. For example, with an anode voltage of +200 V, only -5 V is required on the grid to cut the anode current off completely. If the screen potential is reduced to 200 V then the cut-off point is reached with -4 V on the control grid. Again with the anode held at 200 V.

Amplification Factor

The value of the mutual conductance, gm, for pentodes is similar to that for triodes. However, as is the case with the tetrode, the value of ra for the pentode is extremely high, leading to a high amplification factor. It is useful to look at the case of the EF91 to see how superior is its performance as a high gain amplifier compared with a triode.

For the EF91, the three parameters are:

gm = 7.5 mA/V; ra = 1 MΩ; μ = 7500.

Compare these parameter values with those for the 12AT7 (ECC81) double-triode:

gm = 4.8 mA/V; ra = 12 kΩ; μ = 57.

Suppose we were to use these respective valves as voltage amplifiers with the same value of anode load (say 47 kΩ) in both cases. Since the VAF is given by:

VAF = (μ x Rl) / (ra + Rl)

Then for the respective cases; we should get the following results.

(i) Triode amplifier (using 1/2 ECC81):

VAF = (57 x 47) / (12 + 47) (working in kΩ) = 45.41

(ii) Pentode amplifier (using EF91):

VAF = (7500 x 47) / (1000 + 47) (working in kΩ) = 336.68

Thus, using the same value of anode load in both cases, the pentode has an edge of 336.68/45.41 = 7.4:1 in terms of its ability to amplify a signal voltage, compared with the triode.

Variable-μ Valves

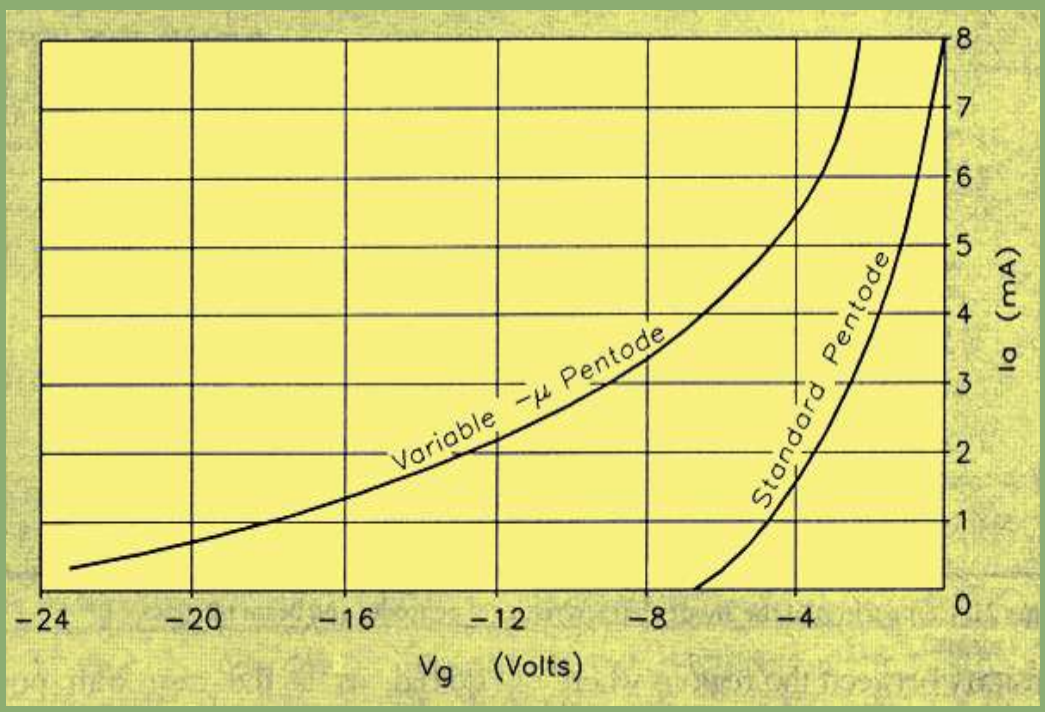

Mutual characteristics for variable-μ and short grid base pentodes.

It is often desirable to be able to control the amplification of a valve, either manually or automatically (as in the case of AGC in radio receivers). This is done by constructing the valve in such away that the mutual characteristic shows a very gradual cut-off, leading to the obvious inference that the slope of this characteristic varies widely from a high value at small negative grid bias values to a low value at large negative bias values. Such a characteristic is shown above, where the mutual characteristic of a normal short grid base pentode is included for comparison. Since the slope of the mutual characteristic is equal to the parameter gm, then it is gm that is actually varying as the grid bias voltage is varied. But, since μ is proportional to gm, then μ also varies with the grid bias voltage.

In practice the way that the construction of a variable-μ valve differs from that of a standard pentode is in the spacing of the control grid wires. In a normal valve, they are equally spaced, whereas in a variable-μ valve the spacing gradually changes from being closely spaced at the centre to being wider spaced at the ends. In use, the rectified IF at the detector end of a radio is returned as negative DC to the signal grid of the variable-μ valve via its grid bias resistor. Since this

negative bias increases as a result of an increase in the IF signal level at the detector, from a corresponding increase in received RF at the tuner-head, gain is reduced. The variable-μ valve would often be the first IF stage.

Return to Series Contents or back to The Tetrode Valve or continue on to The Beam Tetrode

Return to Articles Contents Page

Valve Technology - A Practical Guide

A series of articles from 1993 by Graham Dixey C.Eng., MIEE republished by kind permission of Maplin Magazine.

Menu

The Beam Tetrode

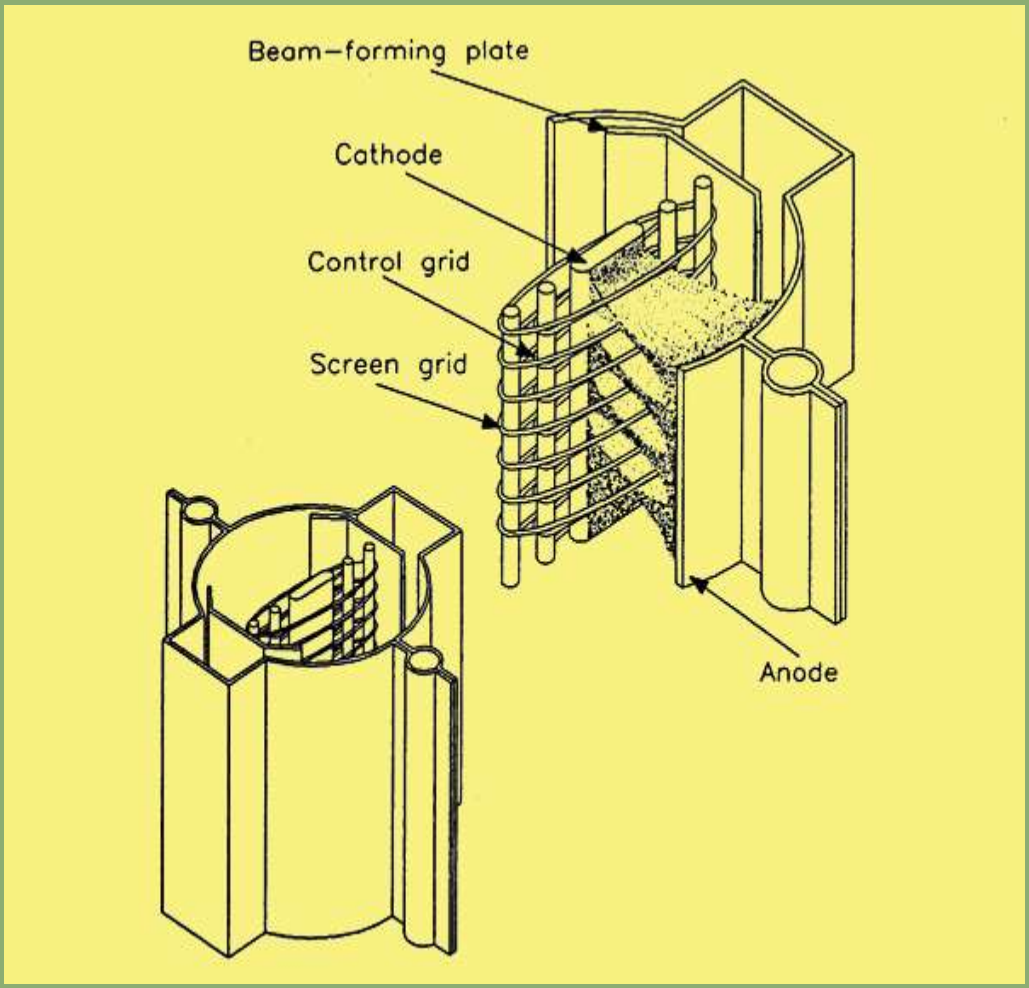

Construction of a beam tetrode valve.

This valve offers an alternative solution to the problem of the 'tetrode kink', and the way in which it does it is by using a pair of beam forming plates instead of a suppressor grid. The construction of a beam tetrode is shown above.

The essential action is obtained by using a large anode-screen distance, and forming the electrons in transit from cathode to anode into two well defined, high density beams or sheets. As a result, there is the effect of a large 'space charge' in existence between screen and anode which, being highly negatively charged, will tend to repel any secondary electrons emitted by either of these two electrodes. This potential minimum between screen grid and anode effectively behaves like a suppressor grid. The beams are formed, by repulsion, by the two plates shown, which are connected internally to the cathode. *See also* The Beam Tetrode.

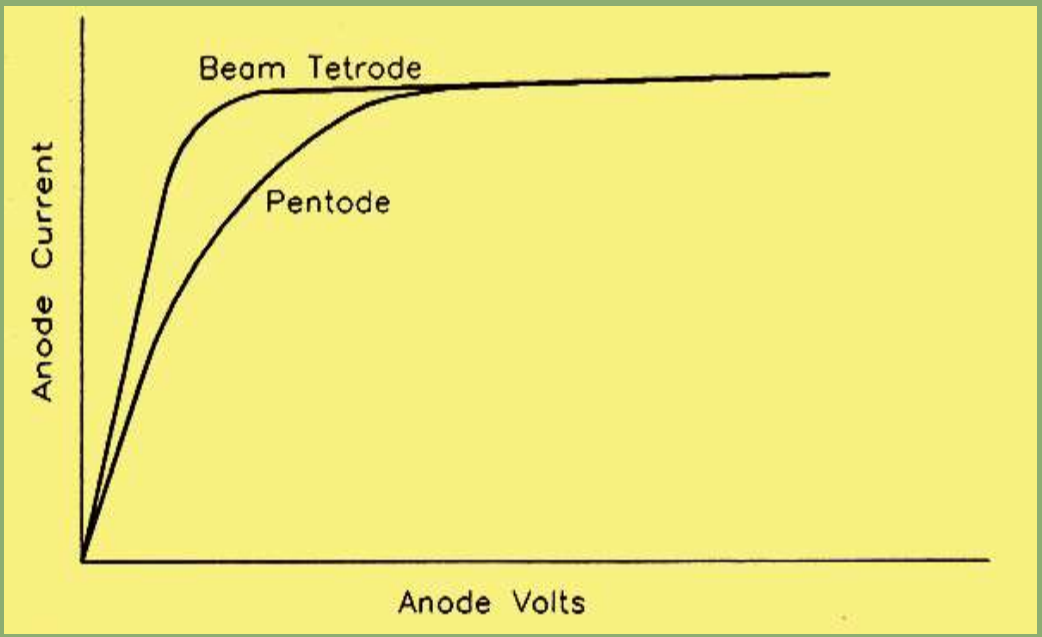

Comparison of the anode characteristics of pentodes and beam tetrodes.

The behaviour of the beam tetrode is much the same as that of the pentode, but there is one essential difference. This is seen in the anode characteristics shown above. The transition between the regions where anode current depends upon anode voltage and where it is independent of anode voltage is very much more abrupt than in the case of the pentode. This is very useful where large undistorted signal swings are required, as is the case with power amplifiers. As a result, the output stages of Hi-Fi audio amplifiers frequently use beam tetrodes instead of pentodes. However, this is often not evident since it has been quite common practice in the past to treat beam tetrodes as if they were pentodes, especially when it comes to applying circuit symbols to them, so that often only direct reference to manufacturer's literature will determine what particular valve actually is.

Even more confusing, however, is the so called 'beam pentode' (such as GEC's KT55, KT66 and KT88 series), but all that's happening here is that the suppressor grid has been 'developed' into a pair of beam forming plates in order to give the device the sharp-cornered curve of the tetrode, and hence a large signal swing capability. It's practically indistinguishable from a beam tetrode in construction. Such exotic devices are nearly always power output valves and very unlikely to be small signal devices.

Return to Series Contents or back to The Pentode Valve or continue on to The Pentode Amplifier

Return to Articles Contents Page

Valve Technology - A Practical Guide

A series of articles from 1993 by Graham Dixey C.Eng., MIEE republished by kind permission of Maplin Magazine.

Menu

The Pentode Amplifier

During the first parts of this series we have managed to introduce all of the most popular valve configurations and have provided an insight into their physical construction and development. We hope that some of the electrical theory, esoteric as it may at first appear, has not dissuaded anyone from experimenting with these devices. In practice it is usual for established circuit configurations to be applied to most types of valve, and reference to valve data literature usually reveals such circuits, thus making valve circuit building much easier. In the meantime we shall continue with the experimentation and discuss a practical pentode amplifier. The term 'pentode amplifier' will be used here to embrace circuits which also employ beam tetrodes as well, since the design principles are essentially the same for both types of valve. However, when comparing the design approach of the above with that for triodes, some significant differences will be found, in addition to the obviously greater circuit complexity of the pentode arrangement. Previously it was pointed out that one significant difference between the triode and the pentode is the fact that the latter has a very much higher value of ra than the triode. It is this fact that changes the design approach.

The Pentode Amplifier Equivalent Circuit

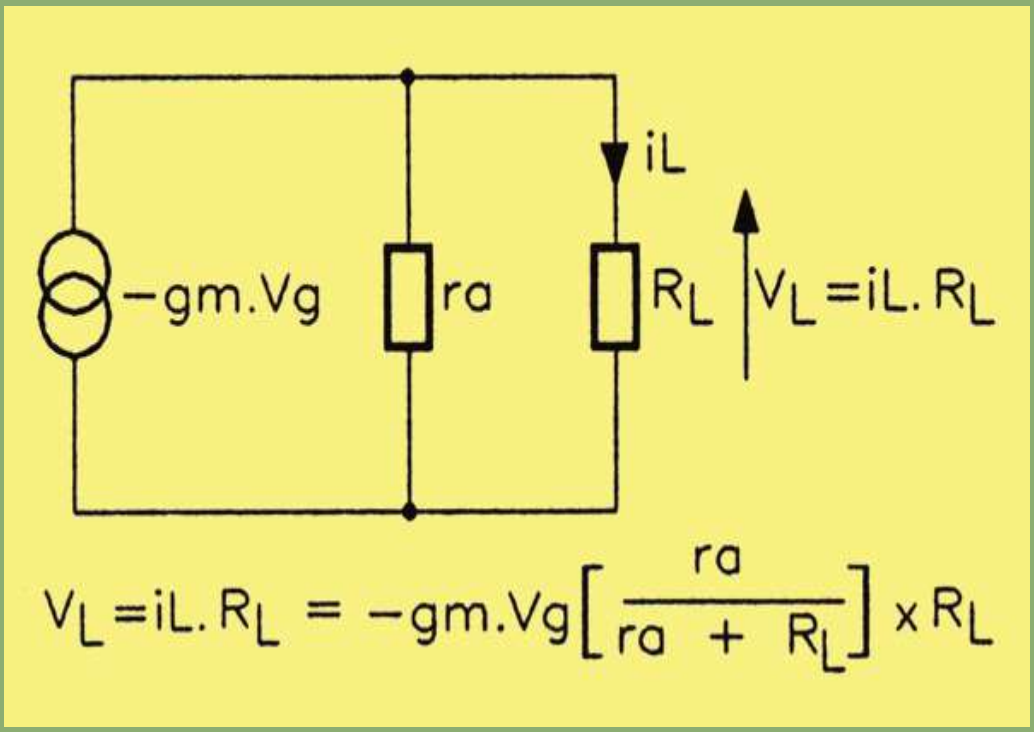

Constant current equivalent circuit for a pentode valve.

Because of the very high value of ra for pentodes, the equivalent circuit that is used is based on a constant current generator feeding into parallel resistors, the output from the circuit then being obtained from the product of a current and the effective load resistance. Thus, we start with so much available current which then divides between the parallel resistors, part of this current then being used to develop the output voltage. The idea is seen above, which shows the simplest possible constant current equivalent circuit for a pentode.

This equivalent circuit consists of three elements. The first of these, with the 'figure of eight' symbol, is the constant current generator itself. This represents the amplifying action of the valve and is seen to consist of the mutual conductance gm of the valve multiplied by the signal input voltage Vg; to this has been attached a minus sign. Dealing with the latter first, this is merely a way of stating that the valve inverts the input signal. With the load in the anode circuit there is always a phase shift of 1800 between the input signal and the output signal. This is exactly the same situation as in transistor amplifiers of both the bipolar and field effect types – so there is nothing new here!

We know that gm = delta Ia / delta vg (where delta means a small change of), so if we are multiplying this by Vg itself, we shall get a current as the answer. To put some figures to this, if the input signal had a peak value of 0.5 V and the gm of the valve was 1.85 ma/V, then the magnitude of the constant current generator in the circuit, namely – gm.Vg, will equal 1.85 (mA/V) x 0.5 (V), which equals 0.925 mA (peak) of anode current.

The two parallel resistors in the circuit above, into which this total current of feeds, are the ra of the valve and the anode load resistor Rl itself. If we assume a value of ra of 2.5 MΩ, then it is merely left to assign a value to the anode load resistor in order to be able to calculate the gain stage and, hence, the value of the output voltage.

Determination of Anode Load

As for the triode, the voltage gain of stage is directly proportional to the value of the anode load. However, there is always an upper limit to the value of anode load resistor that can be used, since the flow of direct anode current through this load causes a DC voltage drop. The maximum permitted voltage drop value depends upon the value of the DC supply available, and the required standing value of the anode voltage. For example, if the DC supply is +250 V and the standing 'no signal' value is not to be less than 80 V, then the DC voltage drop across the anode load

resistor under no signal conditions cannot exceed 250 V-80 V, namely 170 V. With a standing anode current of just 1 mA, the value of the anode load obviously is limited to 170 kΩ or less. Taking the first standard resistor value below this figure leads to a choice of 150 kΩ for the anode load. This is quite small compared with the value of ra quoted above, leading to the conclusion that most of the anode current in the circuit above will flow in the anode load resistor Rl.

A Useful Simplification

We could obviously work out just how much of our constant current of 0.925 mA would flow in the 150 kΩ load resistor. We could employ the current divider principle for this, but it is not really necessary since here is a simple approximation that can be used. This is derived as follows, and is based on the assumption that the ra of the valve is much greater than the value of the anode load resistor. The circuit diagram includes the formula for calculating the output voltage Vl across Rl using the current divider principle mentioned above and the fact that Vl = Il x Rl, This is repeated here as follows:–

Output voltage across

Rl = gmVg x ((ra) / (ra + Rl)) x Rl

If ra is much larger than Rl, then the bracketed term (ra + Rl) simplifies to just ra This allows ra in both numerator and denominator to be cancelled, leaving us with the following expression for the output voltage:–

Output voltage across

Rl = -gmVg x Rl (Equation one a)

This in turn leads to a simple expression for voltage gain for pentode amplifiers; if we divide both sides by the input signal voltage, Vg:–

Voltage gain (VAF) = -gm x Rl (Equation two)

We can now apply the above formulae to the specific case above, where we assigned values to the various parameters and circuit constants.

These were:–

gm = 1.85 mA/V; Vg = 0.5 V peak; Rl = 150 kΩ

Thus:–

Output voltage = -1.85 x 0.5 x 150, = -138.75 V. (using (Equation one a)

above)

Voltage gain = -1.85 x 150 = -277.5 (using (Equation 2) above)

The above calculations should make it clear that the voltage gain of a pentode amplifier can be much greater than that of a triode amplifier, because of its ability to employ very much higher values of anode load. One may also state that the superior amplifying ability of the pentode arises because of its very much higher value amplification factor µ However, this is merely restating the above because µ = ra x gm and it is the higher value of ra that permits the higher value of Rl to be used.

Design of a Pentode Voltage Amplifier

The design of such an amplifier will have to take into account the supply voltage available. In the case of the power supply design offered in A Valve Power Supply within this series, this is limited to about 150 V. To be fair, this may seem a high voltage compared with the values that we associate with today's solid state circuits but, in terms of normal valve practice, it is actually quite low. Supply voltages of the order of 250 to 500 V are more usual. Nonetheless, valves will work quite happily down to much lower voltages and the value of 150 V, arrived at for our power supply design, was a result of considering the desirability of producing a stabilised supply of the simplest type. This led to the use of Zener diodes, the choice of these being dictated in turn by the types available, their power ratings, etc. A bit of a Catch 22 situation really.

If a higher, though unstabilised supply is required, it can be obtained from the reservoir capacitor, where the DC level will be of the order of 340 V DC. In this event, most amplifier stages would have a series resistor and decoupling capacitor inserted into their supply rails to remove the supply ripple from the valve stage's actual HT supply, in effect an RC filter. Examination of commercial valve designs will show this approach to be very common. The design that follows should establish the basic principles, and other designs using different supply voltages should not be beyond the capabilities of the average experimenter.

The valve we are going to use for this experiment is the EF86, which, as with the ECC81 *et al*, comes with a B9A base and a thin glass tube envelope. The EF86 is a low noise, AF voltage amplifying pentode specifically for very small signal preamplifier applications. It features an all enclosing, outer screen or shield around all electrodes (connected to pins 2 and 7), special measures for extra mechanical stability against microphony, and a bifilar wound heater element to reduce hum injection to the absolute minimum.

The full Mullard datasheet for the EF86 is available within the exhibit. A

brief synopsis of the operating characteristics is presented below.

Heater		
V_h	6·3V	Heater volts
I_h	200mA	Heater current
Characteristics		
V_a	250V	Anode volts
V_{g3}	0V	Suppressor grid
V_{g2}	140V	Screen grid
V_{g1}	−2V	Control (signal) grid
I_a	3·0mA	Anode current
I_{g2}	550μA (600μA*)	Screen grid current
R_a	2,500kΩ	Anode resistance
g_m	1·85mA/V (2mA/V*)	
μ, $g_1 - g_2$	38*	

* = Mullard data book quoted figures

μ should we wish to know it, can be derived from the product of the other parameters. Before we leave the table, it ought to be mentioned that, as ever, the heater supply is 50 Hz AC sinusoidal (from the mains transformer) and so of course the values quoted are RMS. A valve base connection diagram is below.

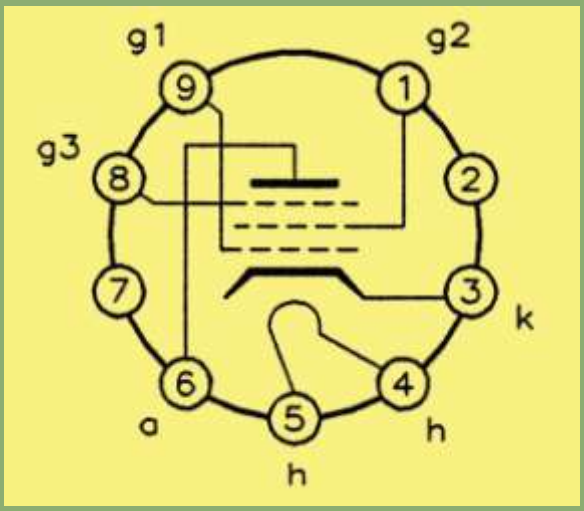

Pin-out diagram for the EF86 low-noise AF pentode valve (base viewed from below)

Back to μ though. Since μ = ra x gm; μ = 2,500 x 1.85; thus μ = 4,625. The parameter ra is in kΩ and gm is in mA/V, so these two can be multiplied directly to give the correct result.

As a starting point, we shall simply scale down the anode and screen data in proportion to the value of supply voltage available. Since the supply voltage is only 150 V to start off with, the anode voltage must be a good deal less than this.

Mentally, we say it could be about 100 V; this leads to the thought that, if we do use this value, there will then be a drop of 50 V across the anode load resistor. Another mental calculation follows based on the simple Ohm's law fact that:–

Voltage drop across anode load Rl = Ia x Rl.

This leads to the rather obvious deduction that Ia and Rl are mutually dependent and choosing one – for whatever criteria – automatically determines the other. Which should we choose first? Voltage gain depends upon the value of Rl, so let us assume that we need to have a voltage gain somewhere in the range 80 to 100 times and work out the required value of Rl that would give such a gain. From this we can determine the corresponding value of anode current Ia and decide whether the value calculated is a practical one.

Since VAF = gm x Rl,

then Rl = VAF/gm,

= 100/1.85 (using the upper limit of VAF),

= 54 kΩ (or 56 kΩ using nearest preferred value).

As already stated, the voltage drop across this load resistor is going to be about 50 V. The anode current value that would produce such a voltage drop can be calculated using Ohm's law, as follows:–

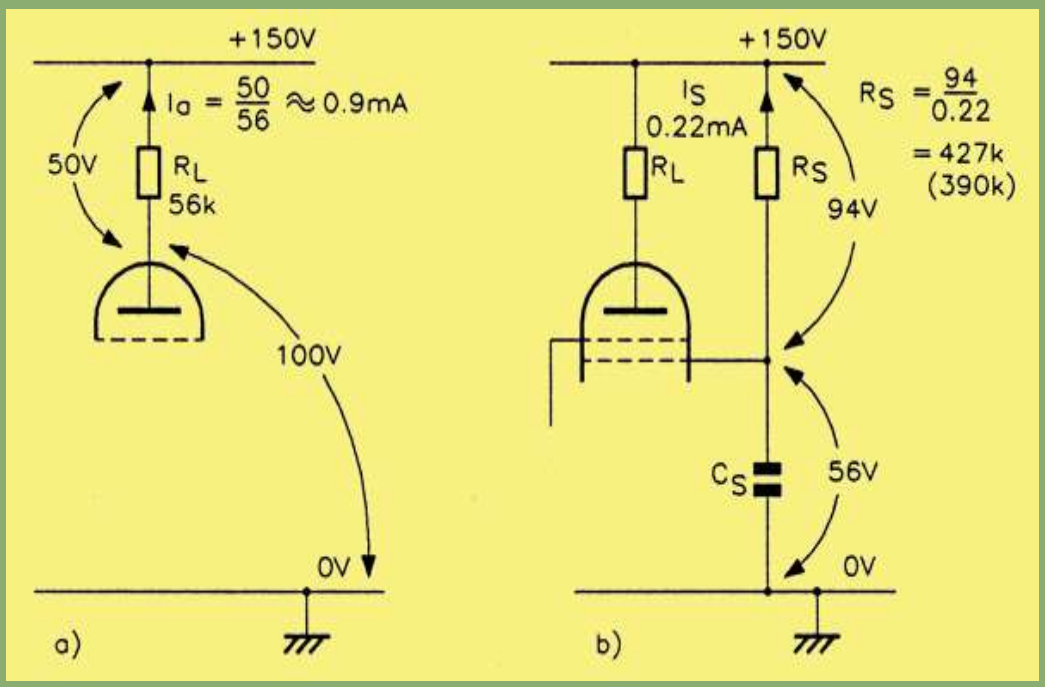

(a); calculating the value of R1 and the anode current Ia, (b); similar calculations for the screen dropper resistor.

Anode current = voltage drop across Rl/(value of Rl) = 50 V/56 kΩ, = 0.9 mA (approx).

This is a perfectly reasonable value for Ia, so the design can proceed on this basis. We now need to calculate the component values for setting the screen voltage and current. What should these be?

Again, we shall simply scale down the values given in the table in the same proportions as we scaled down the anode voltage, that is 2.5:1. On this basis, if Vs = 140 V and Is = 0.55 mA, then these become Vs = 56 V and Is = 0.22 mA, obtained by dividing the original values of Vs and Is by a factor of 2.5.

The screen voltage will be determined in the time honoured way by a resistor connecting the screen to supply HT+, with a decoupling capacitor from the screen down to 0 V. The value of the screen dropper resistor is determined simply by using Ohm's law. Since the screen voltage (with respect to 0 V) is 56 V, then the voltage drop across this resistor is equal to 150 - 56 V, which equals 94 V (see (b) above). With a screen current of 0.22 mA, the value of the screen dropper resistor will

be equal to 94 V/0.22 mA, which equals 427 kΩ

The choice from the nearest preferred resistor values lies between 390 kΩ and 470 kΩ let us use the former as a starting point. We now have to determine the value for the decoupling capacitor from screen to 0 V. This value will be determined by the signal performance required of the amplifier. The topic is covered in depth in the old time classic Electronic and Radio Engineering by F E Terman (McGraw-Hill), in which the author discusses the loss of gain that results, due to negative feedback, if the bypassing action of the screen to ground capacitance is not complete. It is not necessary to get into this discussion in depth; we can just pick the bones out of it and arrive at a rule of thumb approach for a practical solution.

On the basis that (according to Terman) screen bypassing will be complete if the impedance of the screen bypass capacitor is substantially less than the value of the total effective screen impedance, at the lowest frequency of interest, then we can derive the following simple rule.

At the lowest working frequency, the screen bypass capacitor should have a reactance whose value is not greater than one-tenth of the value of the screen dropper resistor.

The full derivation is too complex to include here and requires a knowledge of the dynamic resistance, rs of the screen, which is not available. Its value is, however, usually a good deal less than the value of the screen dropper resistance. On this basis, it seemed safe to use the factor of 'one-tenth' given above.

If we assume that the lowest frequency of interest is, say, 20 Hz – a not unreasonable assumption for an audio-frequency amplifier – then we have to calculate a value of capacitance whose reactance is not greater than 390 kΩ/10 at this frequency.

Since $Xc = l/(2.\pi.f.C)$,

then $C = l/(2.\pi.f.Xc)$, $= l/(2.\pi.20.39.10^{-3})$, = 1/4.9 µF, = 0.2 µF (or 0.22µF, using nearest preferred value)

Note that we have ended up with a perfectly reasonable value for the screen bypass capacitor.

In the case of the EF86, the suppressor grid is not internally connected and, therefore, in this design we shall strap it externally to the cathode. Nine times out of ten it would be connected like this anyway. We now come to the matter of the grid bias and here we are going to have to make an educated guess at the value of negative grid voltage required. All that we know is that, when the anode voltage is 250 V, -2 V on the grid gives an anode current of 3 mA, Since the anode characteristics for a pentode are nearly horizontal over a wide range of anode voltage, then .reducing the anode voltage from +250 V to +100 V should actually have very little effect on the anode current. However, we are also reducing the anode current requirement from 3 mA to 0.9 mA, an approximate 3:1 reduction and also reducing the screen voltage from +140 V to +56 V and this will have a significant effect on anode current. For a given grid bias voltage, reducing the screen voltage brings about a proportionate reduction in anode current. On this basis, we can probably safely leave the grid bias voltage at the value of -2 V already given and assume that the lower screen voltage used will automatically give us the lower value of the anode current that we need. If it does not quite achieve this, we need only modify the test circuit accordingly. Let us see how this works out. The value of the cathode bias resistor obtained by using Ohm's law, as follows. Cathode bias resistor = Grid bias voltage/total cathode current.

In the case of the triode the anode current and the cathode current are one and the same thing; in the case of the pentode they are not. For the pentode: Total cathode current = anode current + screen current.

In this specific case, total cathode current = 0.9 + 0.22 (mA), = 1.12 mA.

Since the required grid bias voltage, Vg, = 2 V, then the value of the cathode bias resistor is equal to 2 V/1.12 mA, which equals 1.8 kΩ (very nearly). This will need to be bypassed by a capacitor whose value is chosen in a similar manner to that of the screen bypass capacitor, namely that its reactance at the lowest signal frequency (20 Hz in this case) is not greater than one-tenth of the cathode bias resistor value. This can be expressed by the formula:–

$C = l/(2\pi.20.l08)$ = 44.2 µF (or 47 µF, using nearest preferred value).

The design is now essentially complete, the value for the grid leak resistor being the nominal 1 MΩ that is usually chosen. The input coupling capacitor will, of course, influence the bandwidth by determining the low frequency cut-off point. If this capacitor has a reactance equal to the resistance of the grid leak at 20 Hz, then 20 Hz becomes the lower -3 dB frequency.

Thus, we have one final calculation for capacitance:–

$C = l/(2.\pi.20.l0^{-6})$ = 1/40π µF = 0.008 µF (or 0.01 µF (10 nF) using nearest preferred value). Thanks to Stig Comstedt for pointing out the errors in these articles. These range from the errors I introduced during OCR to the errors in the

original article such as the input capacitance calculation that actually comes out to 10 nF and not the 100 F as in the diagram below.

The complete circuit for the pentode amplifier is shown below.

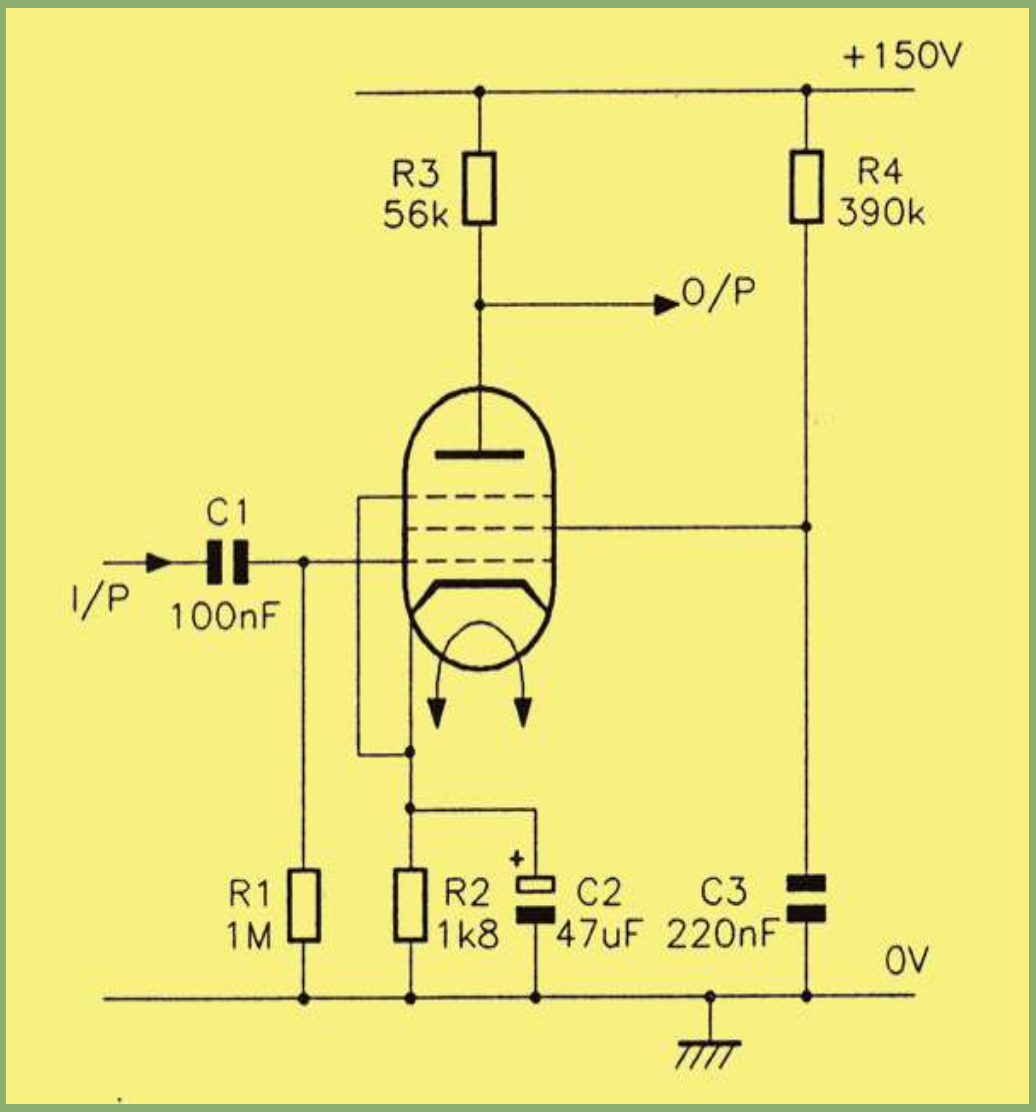

Circuit for the EF86 pentode amplifier designed in the text.

Hooking up the Amplifier

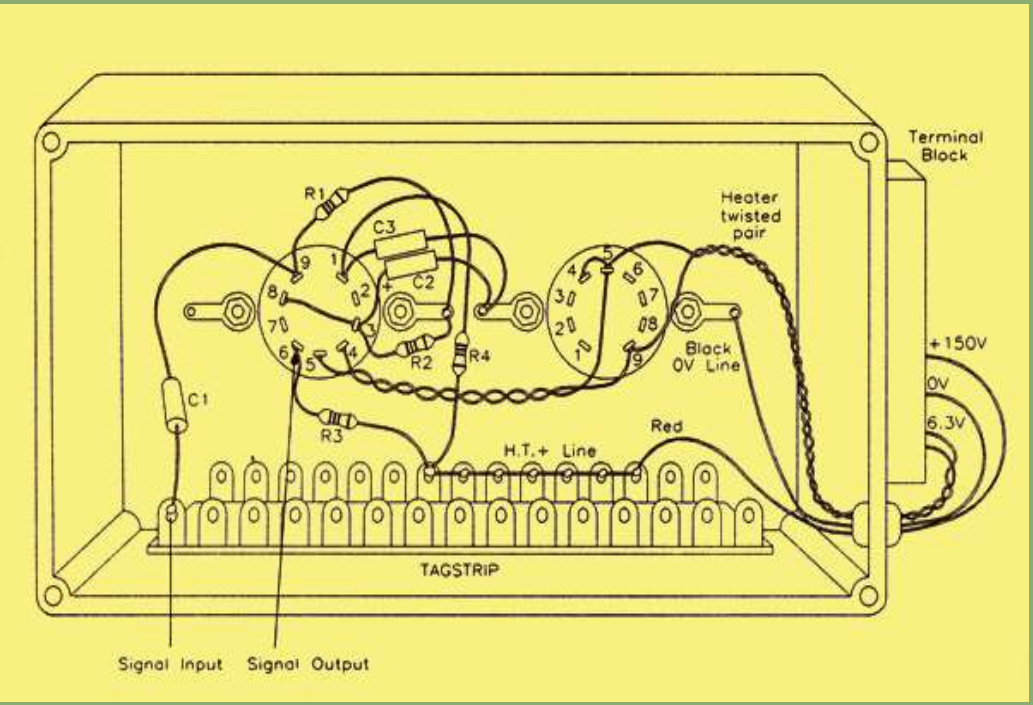

Under chassis layout for the pentode amplifier.

The same experimental chassis was used as previously and the under-chassis layout is shown above. Only one valve base is required, of course. Because the valve base nearer to the terminal block end of the chassis had its heaters wired for the double-triodes, I left this alone for future use and used the other base for the pentode, the heater supply for this valve being wired to pins 4 and 5. A further twisted pair extended the heater wiring from the heater connections of the first valve.

Testing the Amplifier

The first tests consisted of measuring the DC potentials at the relevant electrodes, to see how they compared with the design values. I expected some discrepancy here because of a lack of exact knowledge of the grid bias voltage required. The results were as follows:–

Anode voltage Va = +108 V; Screen voltage Vs = +94 V; Cathode voltage Vk = +2.1 V.

From this it seemed that, even though the valve was probably taking about the right total space current, the screen current was too low, which accounted for the higher than required value of static screen voltage. However, it was not considered vital to make significant changes to the screen components in order to get the screen voltage closer to its design value; for the record, increasing the screen dropper resistor to 470 kΩ caused a reduction in Vs and an increase in Va, with no effect on the dynamic performance of the amplifier.

With the DC values more or less acceptable, a signal input at 1 k Hz was connected to C1, the input coupling capacitor and the CRO used to monitor the input and output signal levels. It was found that the positive peak of the

output signal began to round off noticeably at an output level of 62 V Pk-to-Pk. This is due to non-linearity of valve characteristics and underlines the fact that the theoretical output swings, described in some text books, approaching supply voltage values are just that – theoretical! As it happens, this imposes no limitation at all on the use of this valve since its application area is as a preamplifier of relatively low level signals (where the Pk-to-Pk values are only a few volts) and not as an output stage.

Comparison of the amplitudes of input and output signals revealed something of a disappointment. With an output of 50 V Pk-to-Pk, the input signal level was 0.8 V Pk-to-Pk, giving a voltage gain of just about 63 (36 dB), rather than the figure of 100 (40dB) hoped for. One can account for this by remembering that the values of gm and ra used in the calculations of gain made previously are subject to production 'spreads and, furthermore, were quoted in the data book at much higher levels of voltage and current (anode and screen). Working right down at the low end of the valve characteristics one can expect the slopes to be that much less and, consequently, the values of the parameters to be that much lower than further up (but 'Another Approach' below).

Measurement of Bandwidth

An electronic voltmeter with a decibel scale was used to monitor the output, which was adjusted so as to indicate at the 0 dB mark, on a convenient range, at the mid-band frequency of l kHz. Naturally, the CRO was used to check that the signal level was well below that which would produce distortion. The frequency was then progressively reduced until the voltmeter reading fell by 3 dB; the frequency was noted as 11 Hz, this being an improvement on the design value of 20 Hz. The frequency was then similarly increased until again the output fell by 3 dB; the frequency at which this occurred was noted at 16 kHz, not exactly a startlingly high frequency performance. With more development, this could be improved, a figure of 20 to 30 kHz being a more likely objective.

Summing Up

It is hoped that the procedure above has established a basic design approach to a single-stage pentode amplifier. The results I think, justify statements made earlier concerning the superiority of the pentode as a voltage amplifier, certainly in terms of higher gain at least. The results would undoubtedly be even more with a power supply capable of the higher voltages normally with such amplifiers in practice.

Another Approach

Using Mullard's Data and now, after all this, reference to Mullard application data for the EF86 (which Mullard designed) supplied an

archetypal circuit configuration for an EF86 pentode amplifier, for which, they say, only two sets of resistor values need be decided, and from which, advise Mullard, you should not deviate. Using the amplifier circuit diagram again as a reference – this is, after all, the only circuit configuration that is practical for the EF86.

At HT = 200V to 400V:

Resistor	Scheme 1	Scheme 2
R1	1MΩ	1MΩ
R2	1k2Ω	2k2Ω
R3	100kΩ	220kΩ
R4	390kΩ	1MΩ

At HT = 150V:

R2	1k5Ω	2k7Ω
R4	470kΩ	1MΩ

No tedious calculations of any sort are required on the part of the designer, he just builds the circuit. Either scheme works well for all HT levels from 150 V to 400 V. Scheme 1 is the commonest, and the stage is capable of signal gain exceeding 4O dB (>100 times, depending on HT level – the higher the better), with noise down to 2 µV. Try it and compare it with the calculated model. As is usual in these cases, the manufacturer is right and his recommendations are practically. impossible to improve on. It is for this reason that commercial valve circuits tend to resemble clones of each other; it is extremely difficult to be truly original when designing 'new' valve circuits, the valves themselves will not allow radical deviations. Scheme 2 is an extra-low noise, high gain configuration which might be used for very small signals, like tape playback head output. The actual value of R1 can be altered to match the impedance of the transducer -47 kΩ for a magnetic pick-up cartridge, for example.

However, on choosing these values, you must not then expect to be able to precisely set the biased DC anode voltage wherever you like. In practice the anode voltage will be roughly two thirds that of the HT supply with the values shown in the table. From the point of view that the primary function of the circuit is that of an AC amplifier, its exact DC conditions are of secondary importance.

Return to Series Contents or back to The Beam Tetrode Valve or continue on to Audio Amplifiers

Return to Articles Contents Page

Valve Technology - A Practical Guide

A series of articles from 1993 by Graham Dixey C.Eng., MIEE republished by kind permission of Maplin Magazine.

Menu

Audio Amplifiers

We shall this attempt to join together the design aspects from earlier in the series to form practical, complete audio amplifier systems.

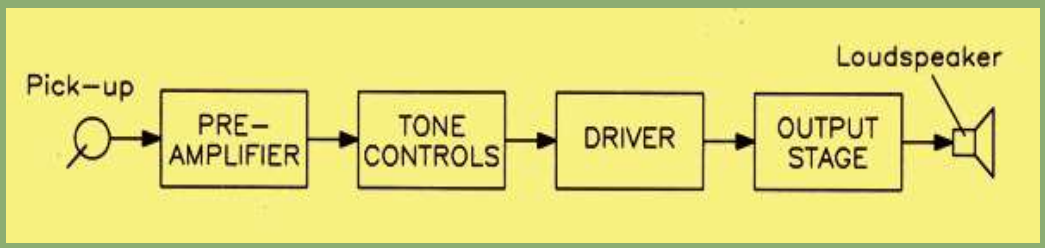

Conventional signal path for an audio amplifier.

The conventional approach to audio amplifier design results in a signal chain of the type seen above. The signal input from a transducer, such as a magnetic pick-up, tape head or radio tuner is 'conditioned' in a preamplifier. This conditioning process may involve nothing more than raising the signal level by one or two stages of wideband amplification. On the other hand, it may involve tailoring the frequency response in a particular way, such as meeting the RIAA compensation curve for magnetic pick-ups. Since the input requirements are somewhat different from other types of transducer, it is usual to provide switching for each input, so as to select the conditioning components required in each case.

Following this first preamplifier stage would be the tone controls, with at least bass and treble lift and cut controls being provided, but often a more comprehensive single 'tone' control was incorporated. (Not forgetting a volume control, of course.) Any additional facilities included special filters known as 'rumble' and 'scratch' (high-pass and low-pass) filters. One must remember that, during the period when such circuits were common, 78 rpm records were still in use, the earlier ones with inherently higher surface noise –due to the fact that they were manufactured from a mixture of shellac and a filler – and especially if they had been in use for some time. Some form of top-cut reduced the effects of surface noise. though often at the expense of high frequency signal reproduction. The surface noise of the 'new' Vinylite records. both 78 rpm and LP types. was much less. Motor rumble was also a problem with crystal pick-ups, since these were susceptible to the low frequency vibrations (in the range of 5 to 50 Hz) emanating from the turntable motor. whereas magnetic pick-ups. which produce an output proportional to velocity (and hence signal frequency) were hardly affected.

The next stage, following the volume control. would be the driver. developing enough signal to drive the output stage to its rated output. The output stage required two anti-phase signals. since it was of the push-pull type. The driver might, therefore. have to perform this function and could be referred to as a phase splitter, of which there were many different variations.

We shall look, then, in turn, at these stages up to the output stage.

The Preamplifier

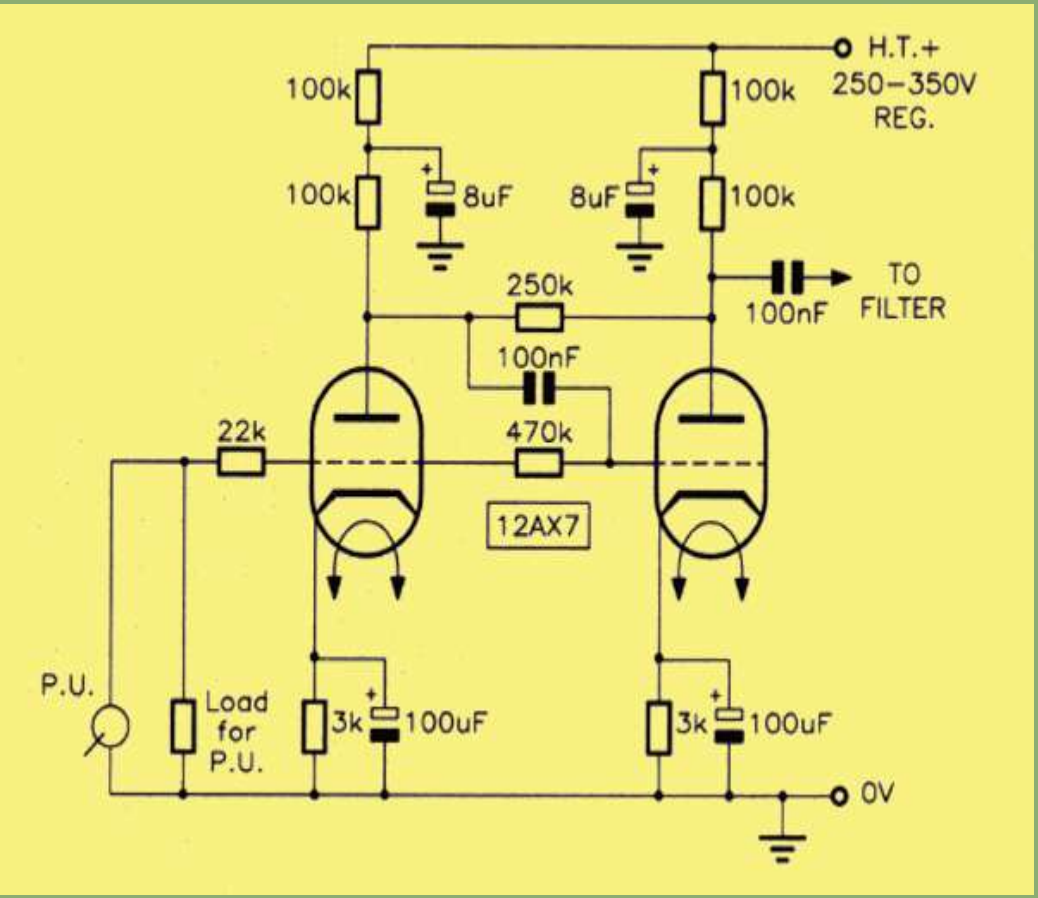

A two-stage preamplifier, from the early 1950s designed for a magnetic pick-up.

Here 'the preamplifier' is usually taken to mean one which performs amplification and RIAA equalisation for a record deck. An example of a two-stage preamplifier circuit is shown above. This is able to use either the 6SL7 or 12AX7 (ECC83) double-triodes; the former is an earlier type of valve on the larger International Octal base. Some of the values may seem a bit odd as they don't exactly match the current preferred values, but could be rounded up or down to meet current practice. It is claimed that each stage can contribute a voltage gain of between 50 and 60. giving an overall voltage gain to the output of about 3,000 times. The intended input device is a magnetic pick-up cartridge.

RIAA equalisation could take one of two forms; either passive, where the first stage has a linear frequency response and merely drives a RC correction network feeding an output stage. The set open loop gain overcomes losses in the network. Alternatively equalisation could be achieved as an inherent part of a negative feedback loop. as is now universally done with solid state circuits. In the circuit above the negative feedback loop is used.

Negative feedback between V1 anode and grid occurs through the series path comprising a 0.1 µF (100 nF) capacitor and a 470 kΩresistor. (For convenience the 470 kΩ resistor is shown connected to the right-hand side of the valve's envelope; actually this is exactly the same point where the 22 kΩ resistor connects. there is only one grid pin.) Negative feedback is applied in a similar manner to the second stage, through the series path comprising the same 0.1 µF capacitor and a 250 kΩ resistor. This pre-amplifier circuit is intended to feed into the tone control circuit (below) via a 0.1 µF AC coupling (DC blocking) capacitor. The tone control provides bass and treble controls and a two-way switch to compensate for the different characteristics of 78 rpm and LP records.

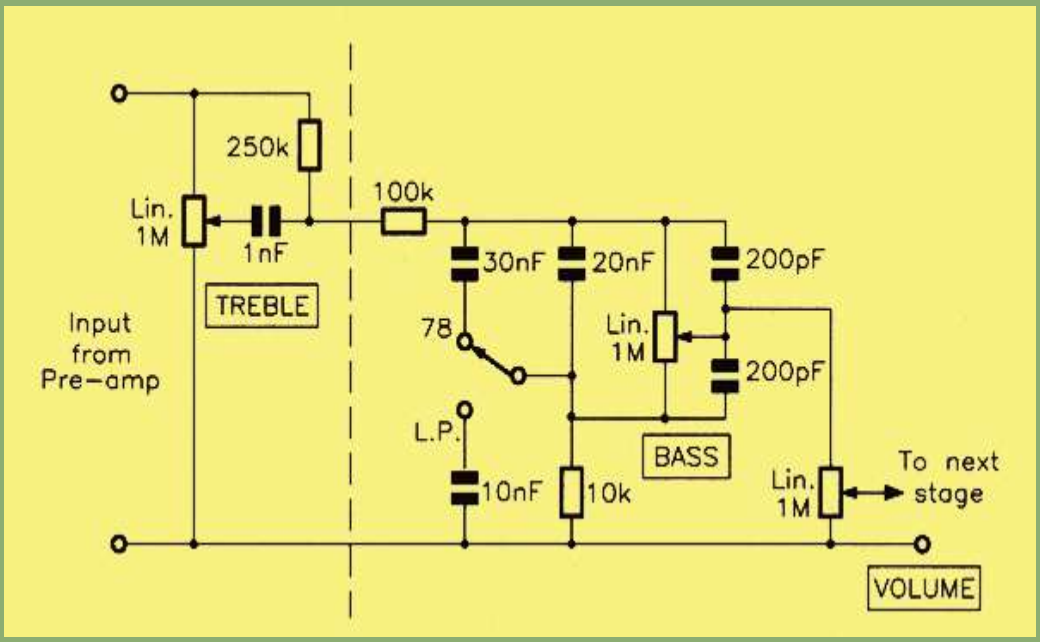

Tone control circuit for use with the 1950s preamplifier.

There were many different ways of obtaining control over tonal response in the early days of Hi-Fi reproduction. with adherents of the various methods making claims that their way was the best. Strange to think that modern design has dispensed with this 'vital' facility entirely! However. Briggs and Garner, writing in 1952 in Amplifiers. the Why and How of Good Amplification, say 'tone control circuits are a necessary evil; they cannot improve quality, but they are necessary on account of the recording characteristics ...' They are referring here to the differences between the recording characteristics of 78 rpm and LP records.

But we digress. The 22 kΩ input resistor works in conjunction with the 0.1 µF / 470 kΩ loop around V1 to provide a 'virtual earth' mode of input. in the same way as is done with modem operational amplifiers. It sets the gain of the stage. which varies over the frequency range due to the reactance of the capacitor. The value of the pick-up load resistor is chosen to trim the net input impedance to match the transducer.

The HT supply of both stages in the 1950s design at the top of the page are individually decoupled to ground, this being a vital part of the design of audio-frequency amplifiers, in order to avoid instability due to coupling between stages through the common power supply line. The true anode load of each stage is a 100 kΩresistor, wired directly in the anode lead. Above this is a low-pass filter comprising a further 100 kΩ resistor going to the positive terminal of the supply, and an 8 µF electrolytic capacitor to ground. As a result of this filtering, the alternating component of the anode current does not flow back to the supply, but is shunted to ground through the 8 µF capacitor, after first passing through the 100 kΩ anode load and developing the output voltage of the stage. (These days of course you'd be hard pressed to find an 8 µF electrolytic, but a modern –and, to be honest, better – 10 µF high voltage type will do just as well.)

Tone Controls

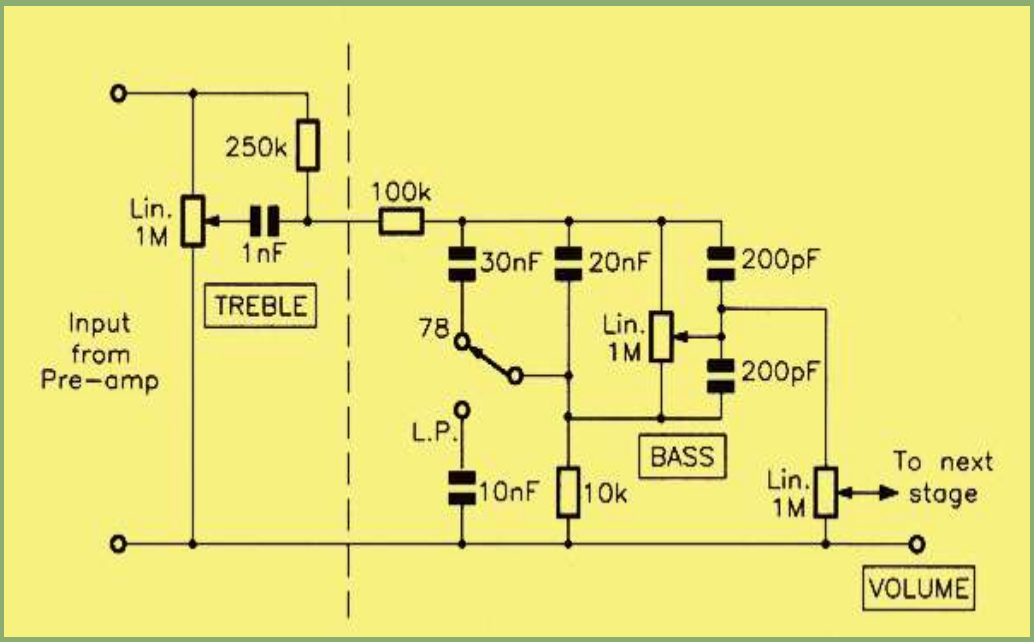

Tone control circuit for use with the 1950s preamplifier.

The tone control circuit above is of the 'passive' type and is formed by cascading a treble control with a bass control the division between the two sections being shown by the vertical dotted line. The output level is controlled by a 1 MΩ linear potentiometer. Taking the bass section first, this is a 'Connoisseur' circuit (Connoisseur being a well-known name from the earlier days of Hi-Fi) that gives variable bass compensation for both 78 rpm and LP records. The two 200 pF capacitors maintain constant response at high frequencies. otherwise the following capacitance of the wiring and input of the next stage could cause HF loss. In the treble section. the value of the capacitor can be anything between 0.0002 µF and 0.002 µF (200 pF and 2 nF, though apparently the value given of 0.00l µF (1 nF) offers a good compromise for both types of record.

Another Tone-controlled Preamplifier

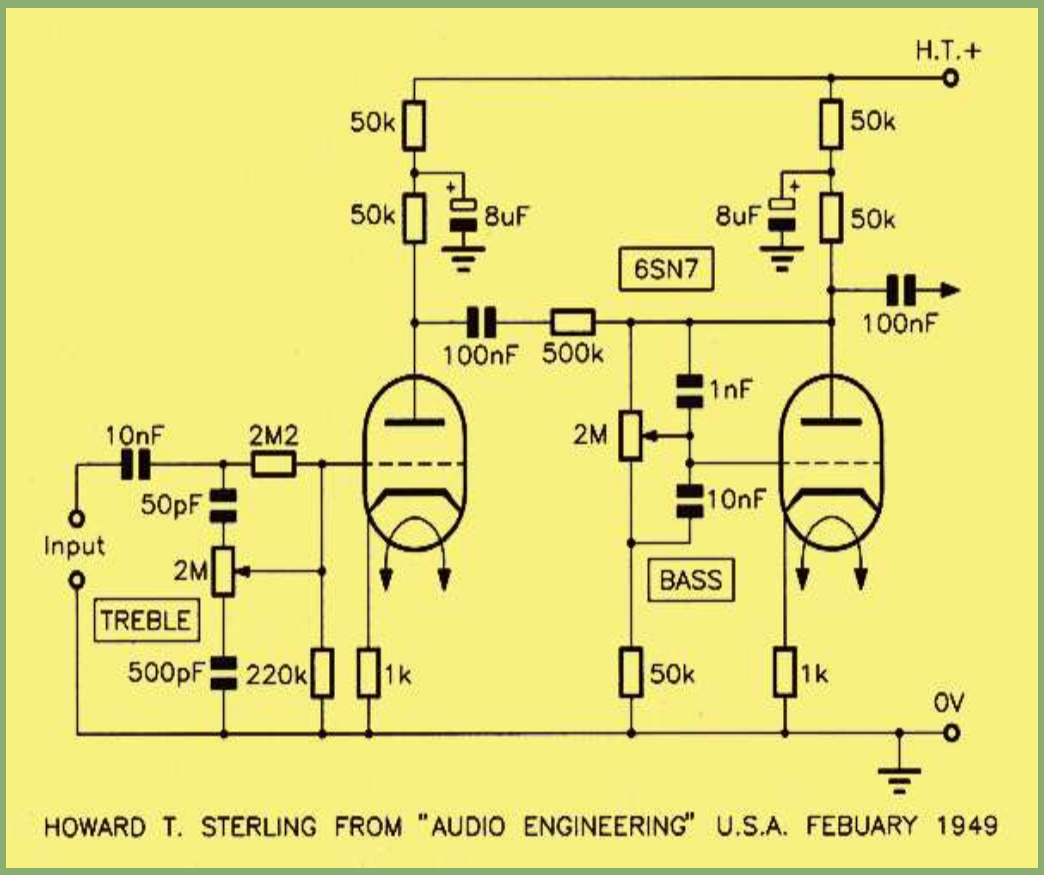

A tone-controlled preamplifier.

The circuit above uses the once popular 6SN7 (an octal based double-triode, still available from valve suppliers as 6SN7GT. 6SN7GTY. etc.). employed as a two-stage preamplifier with the treble control in the input circuit of the first stage. and the bass control between the two stages. The claimed performance of this circuit, which goes back to 1949, is 40 dB of bass control at 20 Hz and 30 dB of treble control at 10 kHz. the crossover point being at 800 Hz. The circuit is particularly useful for record reproduction because the treble cut comes in an octave higher than the top lift. so enabling surface noise to be reduced without adversely affecting the middle-to-high response and spoiling the output quality. Note again that the supplies to both stages are decoupled by their own filters comprising an 8 µF capacitor in conjunction with a 50 kΩ resistor.

It is possible to obtain tone compensation by the use of selective negative feedback. In a simple case, it is possible to make the cathode bypass capacitor smaller than the usual value, so giving incomplete bypassing at all frequencies. The effect of this is to introduce some degree of negative feedback at low frequencies (where the reactance of the bypass capacitor is high), so causing a roll off of gain in this part of the frequency spectrum. The amount of control obtained will obviously depend upon the relative values of the cathode bias resistor and its bypass capacitor.

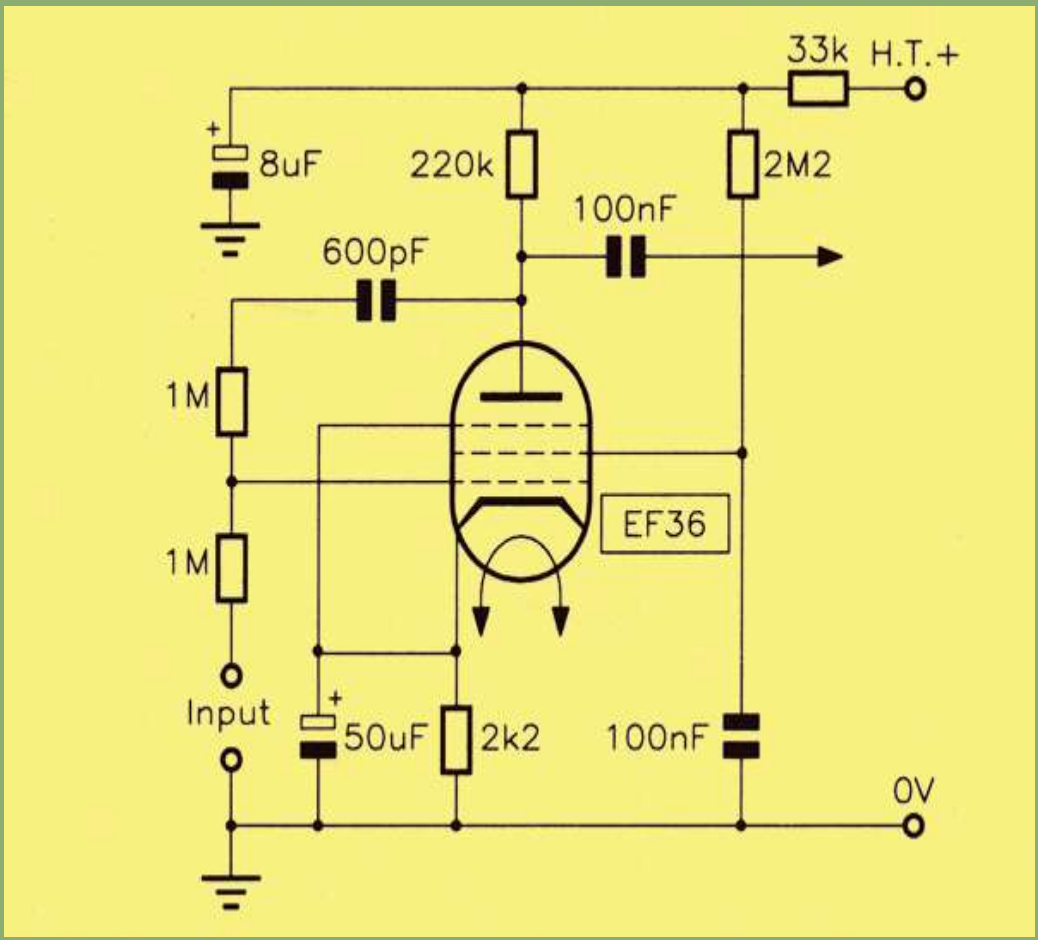

Tone (bass) control by negative feedback.

The diagram shows a method whereby negative feedback is introduced between anode and control grid of an EF36 pentode valve. The feedback path comprises a series combination of 1 MΩ and 600 pF. Since 600 pF is fairly small, the feedback will be less at low frequencies (where the total impedance of this path is high) than at high frequencies, where the impedance of the path is virtually that of the 1 MΩ resistor alone.

This can be illustrated at three critical frequencies, as follows:–

- **At the low frequency of 40 Hz, the reactance of C is 6.63 MΩ giving a total path impedance of √45 which is 6.71 MΩ**
- **At the middle frequency of 1 kHz, the reactance of C (600 pF) is 265 KΩ giving a total path impedance of √1.265 MΩ which is 1.124 MΩ.**
- **At the high frequency of 10 kHz, the reactance of C is 26.5 kΩ giving a total path impedance of approximately 1 MΩ**

Quite clearly the feedback at middle and high frequencies is substantially greater than it is at low frequencies. For the values given in the circuit above, the bass response rises at the rate of 6 dB per octave below the comer frequency of 300 Hz.

Inputs and Outputs

The output of the tone control would then go to a volume control before feeding the driver or phase splitter stage of the output amplifier. At this point unity gain output buffers of the cathode follower type could be considered, particularly following the RIAA preamplifier, for driving

external equipment such as a tape recorder. Also not shown here is any form of input source selector. A rotary switch can easily precede the tone control stage(s) for inputting a choice of various programme sources. one of which would be the output of the RIAA preamp. In this case a buffered output for tape recording would immediately follow the selector switch.

Return to Series Contents or back to The Pentode Amplifier or continue on to Driver/Phase Splitter Circuits

Return to Articles Contents Page

Valve Technology - A Practical Guide

A series of articles from 1993 by Graham Dixey C.Eng., MIEE republished by kind permission of Maplin Magazine.

Driver/Phase Splitter Circuits

The function of a phase splitter circuit is to the. now amplified. signal – which is of course single phase in nature – and derive from it two equal amplitude, anti-phase signals, balanced about ground. These signals are used to drive the control grids of the push-pull output valves in opposition. Phase splitting, of one type or another, is always necessary with valves. since there is no equivalent of the complementary NPN/PNP devices found in semiconductors. Driving the grid of a valve in a positive direction causes an increase in anode current, whereas driving the grid in the negative direction causes a decrease in anode current. This fact dictates the need for a pair of anti-phase inputs.

One way of splitting the phases is to use an input transformer to the output stage with the secondary centre-tapped. this point being grounded. Indeed this technique has been extensively used in the past, but it carries with it all of the attendant disadvantages of such devices, not least of which is the possible poor performance at high frequencies due to shunt capacities. The trend was, therefore. to move away from the use of transformers in favour of circuits employing other techniques, some of which are described below.

The Concertina Phase Splitter

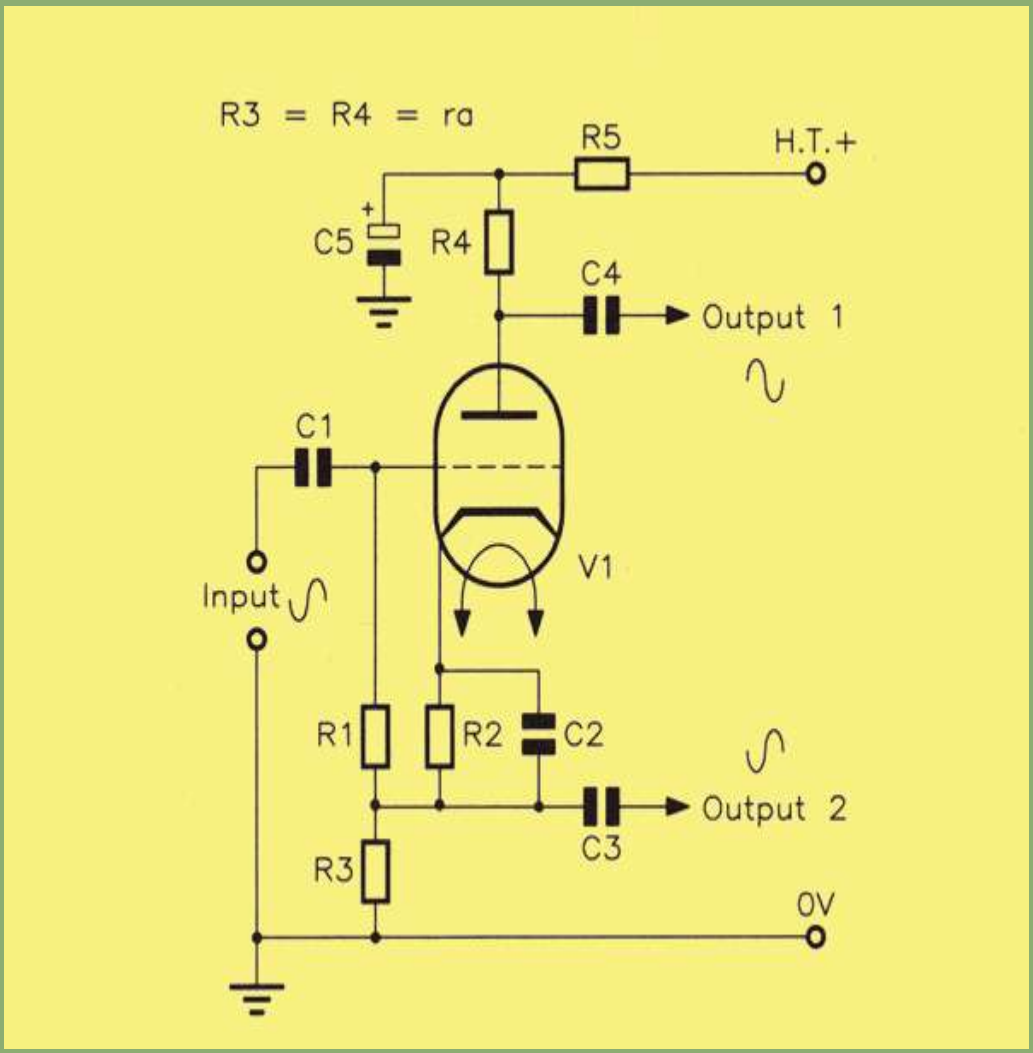

The concertina phase splitter.

The diagram shows what some may consider to be the classical phase splitter circuit, the concertina phase splitter. This rather colourful title is derived from the way in which the voltages at the output points of the circuit emulate movements of the hands of the musician in playing a concertina. Thus. with this mental picture, it isn't too difficult to visualise the outputs rising and falling in phase opposition.

To achieve this, use is made of the fact that there is a phase shift of 0° between the control grid and the cathode, and a phase shift of 1800 between the control grid and the anode. Thus these two electrodes automatically provide the two anti-phase signals required, and all that is then necessary to do is to design the circuit so that these two voltages are equal in amplitude. To achieve this, the resistors R3 and R4. which are the cathode and anode loads respectively, are made of equal value and also equal to the ra of the valve. The voltage gain of the stage is then slightly less than unity, usually about 0.9. To balance this obvious disadvantage. the outputs can be balanced to within less than 1%, although it is necessary to use close tolerance resistors for the loads. No initial adjustment for balance is then necessary. The circuit is also simple and requires only one valve. The grid bias for the valve is derived from the resistor R2 in the cathode lead, in the usual way, the grid leak Rl being returned to the lower end of R2 rather than to ground.

The Paraphase Splitter

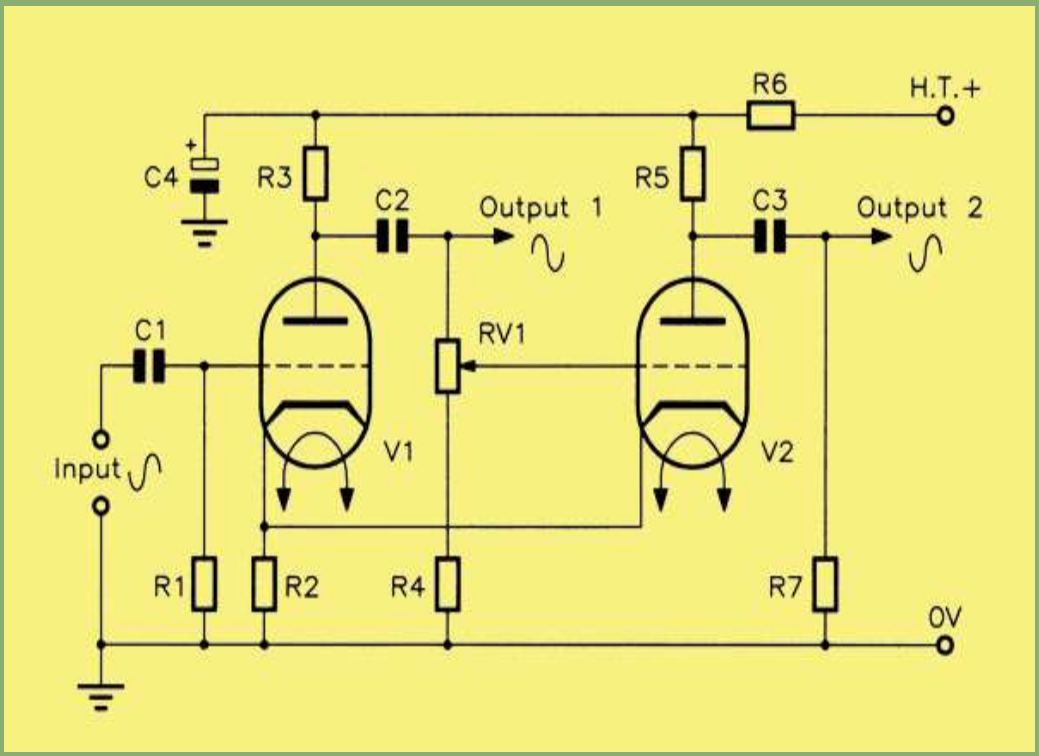

The paraphase splitter.

An alternative circuit is the paraphase splitter. This uses a pair of triodes and, as expected. would usually employ both parts of a double-triode valve. In operation. this can be regarded as a two-stage amplifier in which each of the stages contributes one of the two complementary outputs. The input to the second stage is derived from the output of the first stage, this being tapped off using the potentiometer RV1. In this way the two outputs can be made identical, but it requires some initial setting up, observing the two outputs on a double beam or dual trace CRO (Cathode Ray Oscilloscope) while RV1 is adjusted. However, this twin valve phase splitter version has the advantage of higher gain and greater output over the concertina type, but appears to have rather poor response at high frequencies, arising because of the necessarily low value of resistor R4.

Improved Paraphase Splitter

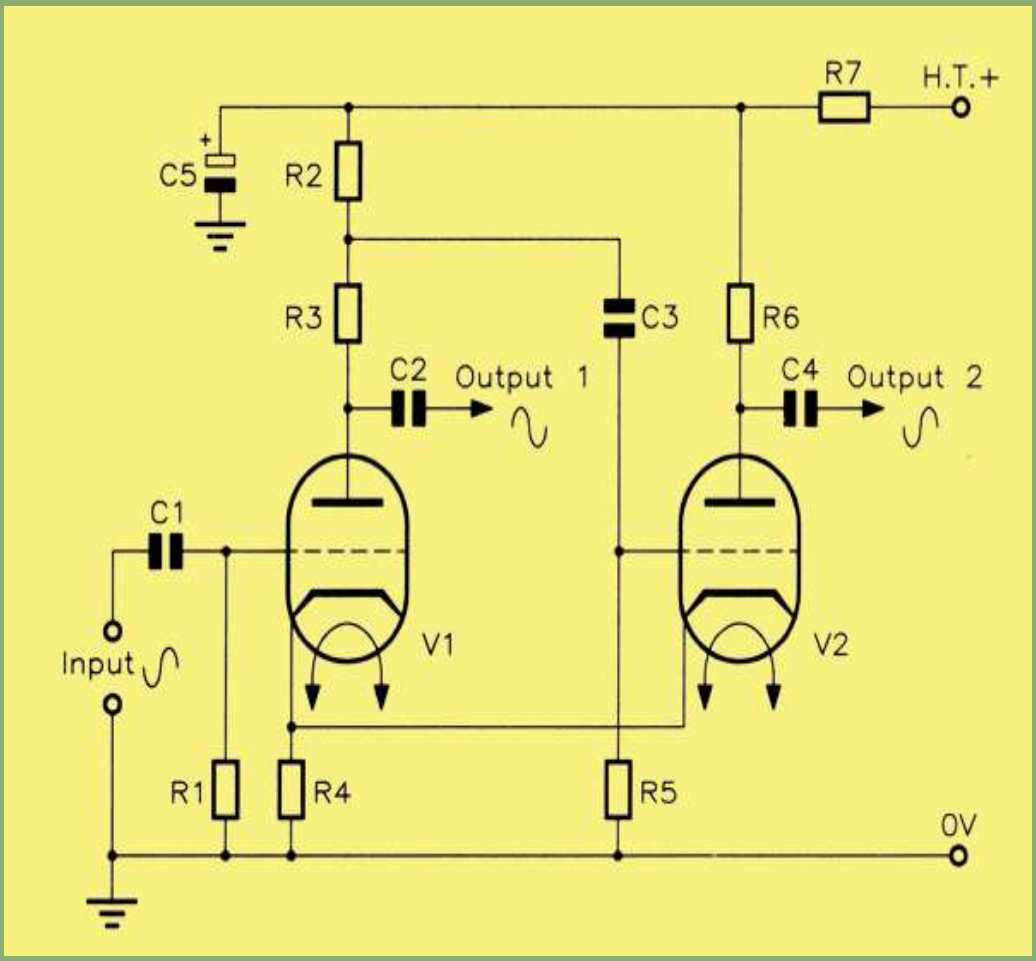

An improved paraphase splitter.

A version of the above described paraphase splitter, with greatly improved HF response, is now presented. In this circuit, the principle remains essentially the same, but the potentiometer action is obtained by splitting the anode load of the first stage into two resistors, R2 and R3. These are proportioned so as to provide just sufficient drive to the second valve so that its output equals that of the first stage. Because the grid leak resistor V2 (R5) can now be made larger, the HF response is better.

The Cathode-Coupled Phase Splitter

See also **High-quality Audio Amplification**

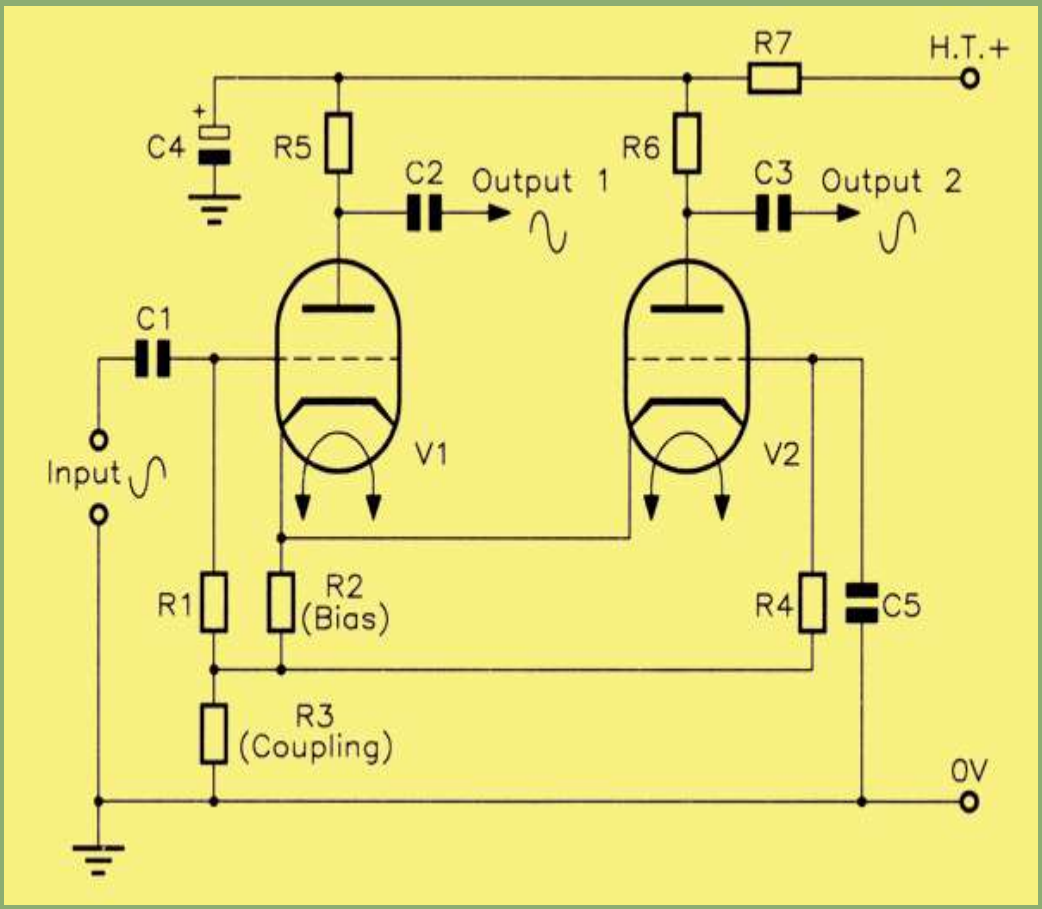

Cathode coupled phase splitter.

The name of this circuit derives from the fact that the only signal coupling between the two stages is provided by their common cathode resistor R3. The way in which the circuit works is as follows:–

If the grid of V1 is driven in a positive direction, the anode current of V1 increases, which causes an increase in the voltage across the coupling resistor R3. At the same time the anode voltage of V1 is falling. The increased voltage drop across R3 means that the cathode of V2 is now more positive relative to its grid than it was before (but only because C5 is AC coupling the grid of V2 to ground as a reference). It is as if the grid had been driven negatively, the result being that the anode current of V2 falls. The anode voltage of V2 then rises. From this we can see that the signal drive to the grid of V1 alone produces a pair of anti-phase voltages at the two anodes. Furthermore, these two voltages are equal in amplitude.

For AC signals, the grid of V2 is connected to ground via the capacitor C5. The size of this capacitor is important, If it is not large enough, then there will be an imbalance at low frequencies due to the fact that the grid of V2 will not be truly grounded, but connected to a tapping point on the divider formed by R4 and C5 across R3. However, it also provides a very useful degree of immunity to unwanted very low frequencies. improving the stability of the circuit. The circuit uses a common cathode bias resistor, R2, with individual grid leaks R1 and R4. There is a slight imbalance in the outputs at all frequencies because of the current flow through the resistors R1 and R3, but this effect can be minimised if R1 is made large; values of 2 MΩ often being used. Also, because of basic inefficiencies, losses can cause the non-inverted output from V2 anode to be slightly less in amplitude than the inverted output from V1 anode. A well-worn method of compensating for this is to increase the value of R6 slightly by adding another resistor in series, whose value is 5% or less than that of R6 (as a guide). In the days when only cruder, less than accurate carbon resistors were available, it could be suggested (by Mullard in one case) to test the two anode resistors with an ohmmeter. It would be quite likely that they were different. You then fit the one having the greatest resistance as tested in the R6 position!

This imbalance of outputs, and the various methods needed to compensate for it, seems to be the main aspect about the twin-valve splitter that annoys the 'concertina' fans (in that they can't understand why anybody should insist on wanting to use it if the 'concertina' is the 'best'). Another possible disadvantage has to do with valve ageing. While each of the two triodes sharing the same envelope would, arguably, be very closely matched (coming from the same batch), their characteristics may alter slightly with age, causing imbalance. However, the main advantage of the cathode-coupled paraphase splitter is inherent voltage gain, which the 'concertina' doesn't have. This, together with a greater output voltage swing capability, can provide enough signal drive for less sensitive triode and 'ultra-linear' pentode output stages,

but from only two valve envelopes. For the same type of output stage the 'concertina' usually had to be followed with an additional amplifying push-pull stage, as is the case with the Williamson designs requiring three valve envelopes.

A Combined Preamplifier and Phase Splitter Circuit

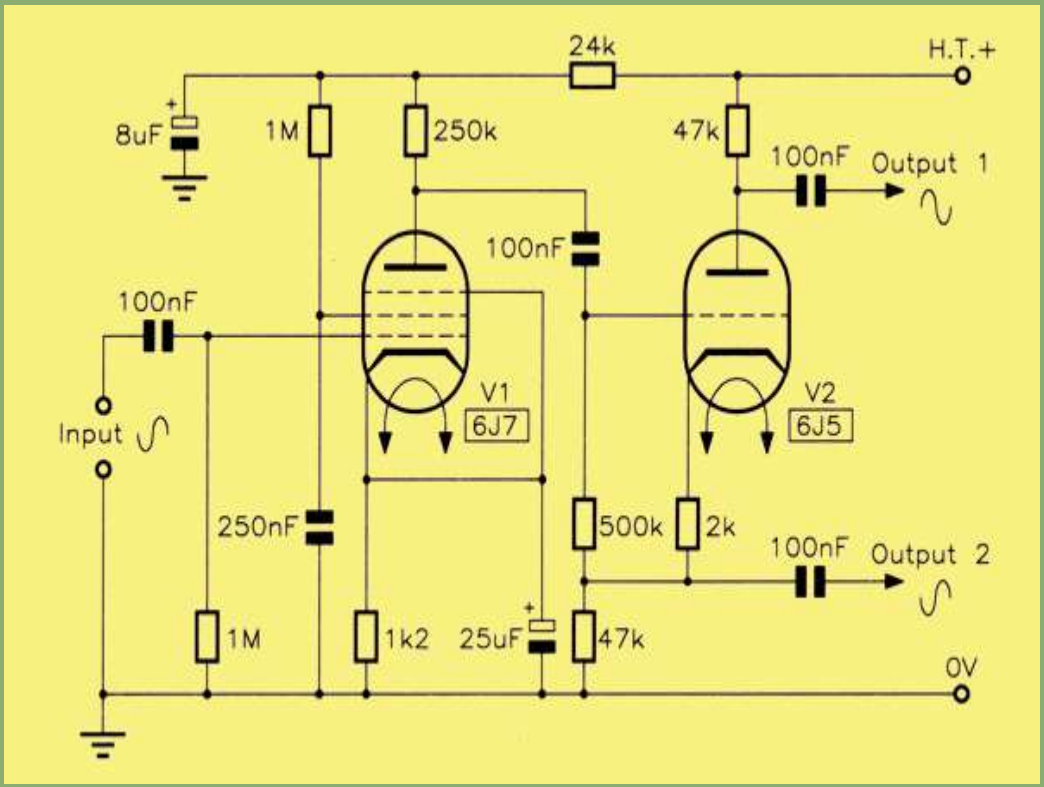

Combined preamplifier and phase splitter circuit.

The final circuit comprises a typical pentode first stage voltage amplifier followed by a triode concertina phase splitter. In the original circuit, a 6J7 pentode is followed by a 6J5 triode, both of these being on the earlier International Octal bases. All of the true gain of the circuit resides in the pentode stage of course, the phase splitter, as said earlier, actually introducing a small loss. Taking the two stages into account, the overall voltage gain is reckoned to be of the order of 84 or so, the proportion of gain and loss being 94 for the pentode and 0.9 for the triode.

For the 6J7 pentode, the parameters are μ = 1,500; ra = 1.5 MΩ. It is impossible to realise the full gain of such a valve, which can only be done if the anode load is made much greater than ra, because the HT requirement would be for an unrealistically high value of supply voltage.

This configuration became very popular in the hey-day of valve power amplifiers, and can take several forms. A preceding triode might be used in place of the pentode, for instance, in which case a double-triode would fit the bill (eg, a 6SN7 as in the 1947 Williamson amplifier). It is also possible for the grid of the second valve to be directly DC coupled to the anode of the first valve, making the two biasing resistors and coupling capacitor redundant and reducing component count, but it means that the DC level at V1 anode must be maintained at something like a third of the total supply voltage for the second stage to ensure correct biasing of V2.

Also published was a Mullard variation of this where an EF86, taking the place of V1, directly connects to the first grid of a double-triode paraphase splitter like the improved design above, using a ECC83. There is only one common cathode resistor, and DC bias for the second triode comes also from the anode of Vl , but via 1 MΩ decoupled to ground with 100 nF, A 6J5 and 6SN7 in this configuration also work well.

Return to Series Contents or back to Audio Amplifiers or continue on to Audio Power Amplifiers

Return to Articles Contents Page

Valve Technology

A series of articles from 1993 by Graham Dixey C.Eng., MIEE republished by kind permission of Maplin Magazine.

Menu

In the final part of this series, we conclude last month's discussions on practical audio amplifier systems with the final link in the chain between pick-up and loudspeaker - the power output stage.

The previous amplifier stages have been concerned with producing a faithful replica of the input signal, but at a larger voltage amplitude. The function of the output stage is rather different and certainly more demanding. Because it requires work to drive the speech coil of a loudspeaker, and because work equates to power when we introduce the time element, the output stage must produce large excursions of current as well as voltage - and it must do so with the minimum amount of distortion being introduced. This means that the output valves must be capable of passing large current flows, which implies a heavy emission of electrons from the cathode surface in the first place. There are two factors that limit the amount of current that a valve can carry They are:

a. the surface area of the cathode capable of emitting electrons, coupled with the power input to the heater
b. the amount of heat that can be dissipated at the anode without causing degradation of the valve's performance, eg, the emission of gases from the surface, which would seriously impair the operation of the valve by causing collisions between the gas molecules and the electrons in transit; excessive heat could also cause failure of the anode structure.

It is obvious from the above points that valves intended for high power applications (using the word 'high' in a relative sense, since one man's watt is another's kilowatt!) must have larger electrodes than those intended just for voltage amplification.

Triodes versus Pentodes

These two types are obvious contenders for the role of output valve; for the moment we will lump beam tetrodes in with pentodes. What we need to consider is how well each type of valve will be able to handle the task, given the rather stringent requirements that apply Let us consider triodes first.

lf the characteristics were absolutely linear and parallel, no amplitude distortion at all would result. Both half-cycles of the signal input would produce equal swings at the output, each being a faithful copy of the input.

The mutual (grid) characteristics for triodes tend to be both linear and parallel, which means that swings of the signal voltage along these characteristics should not cause too much distortion in the output (we won't, at the moment, quantify

how much distortion is tolerable), so this is a plus point for the triode. On the other side of the coin, however is the low gain of the triode. This means that, for a given output signal amplitude, the input signal has to be fairly large if the stage is to be driven fully At the same time the triode also takes a great deal of current from the HT supply, so is not very economical in terms of power consumption (when compared with its amplifying capability).

The type of amplitude distortion that the triode does produce is largely second harmonic. Thus, an input signal at, say 400Hz would have, after amplification, a significant amount of an 800Hz component also. This fact is, as we shall see later not as serious as it might at first appear, since it is relatively easy to reduce this type of distortion to acceptable proportions.

Looking at the pentode now, and bearing in mind some of the deficits listed above for the triode, one advantage that we can call to mind immediately is going to be its higher voltage gain, allowing the use of a smaller input signal in order to obtain a given output. Also, it takes less HT current, and so is more economical with supply power than the triode. However; its mutual characteristics are not as linear or as parallel as those of the triode, though it is possible to compensate for this deficiency.

As far as harmonic distortion is concerned, the dominant harmonic produced here is the third harmonic. Eliminating this is not as easy as getting rid of even order harmonics: 2nd, 4th, etc. One point of comparison that can be made with triodes, that we shall see is significant, is the value of the anode slope resistance, ra. In triodes this is quite low, whereas in pentodes it is by comparison generally extremely high.

The Triode Output Stage

Any valve amplifier, being an active device that is delivering a signal to a load, can be considered in a general case to be a generator. Any generator cannot avoid having an internal resistance, and the value of this internal resistance will determine the optimum value of load impedance into which the generator can deliver its maximum power. For valves, the internal resistance is the parameter ra, this being the reciprocal of the slope of the output characteristics, as we have seen in Part One and Part Two, and so is quite clearly the output resistance of the valve when feeding a load.

The *maximum power transfer theorem* states that ‘a generator delivers maximum power to a load when the source resistance of the generator equals the load resistance’. Before anyone reaches for pen and paper to tell me that I am wrong, let me just add that this theorem as stated applies when the load is resistive. If the load is reactive then maximum power is transferred to the load when the load impedance has a value that is equal to the conjugate of the generator impedance. If the word conjugate isn’t understood, don’t worry about it; it comes from

complex algebra, which I have no intention of going into here!

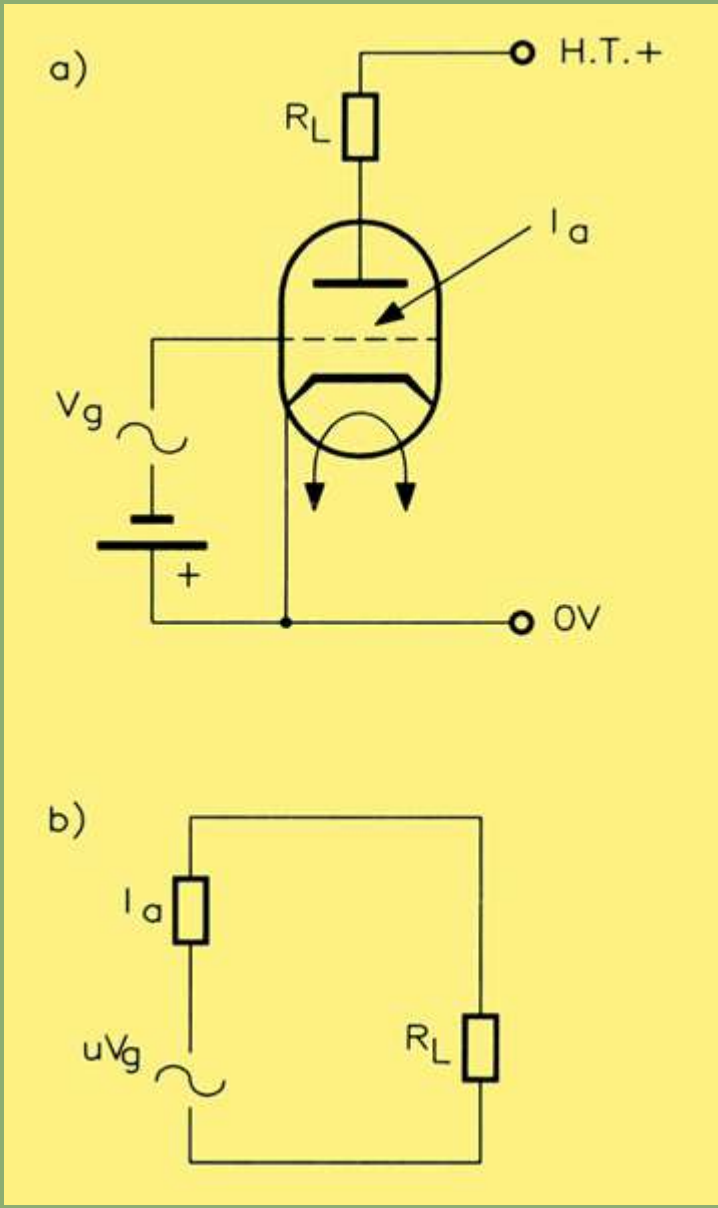

The valve as a generator; (a) actual triode circuit (without bias components) and (b) the AC equivalent circuit.

The figure above shows the valve represented as a generator Figure (a) shows the triode (it could equally well be a pentode) with an input signal Vg, a load RL in the anode circuit and the internal resistance ra. The grid bias voltage is represented by a battery and since this voltage is DC Figure (b) shows the equivalent circuit which can be used to analyse the performance of the amplifier This comprises three components: a voltage generator μVg, which represents the valve action and two resistances: ra, the generator internal resistance; and RL, the load resistance. In the specific case of the valve, whether triode or pentode (in theory at least), the maximum power will be transferred to the load when the

latter is equal to the ra of the valve. This raises a problem immediately.

The load on an audio output stage is the speech coil of the loudspeaker it is totally impracticable to wind such a speech coil so that it has an impedance anything like that of the ra of even a triode valve, which will be of the order of thousands of ohms! A practical value for the speech coil impedance is unlikely to be more than a few tens of ohms (eight ohms (8Ω) is a common nominal value). From this it is quite obvious that it is impracticable, in the case of valves, to connect the speech coil directly into the anode circuit of the output stage as the load. There are other considerations that make this undesirable anyway, but the above argument, on the grounds of load and source impedances, should make it clear why this course of action cannot be undertaken.

The Output Transformer

The answer is to use an output transformer with a step-down turns ratio. The required ratio 'n' can be calculated from a simple formula, which is as follows:

n = √(load required by valve) / (resistance of speech coil)

Notice that the above formula says *load required by valve* and not actually the valve's ra. This is because the load presented to the valve by the loudspeaker through the transformer is not resistive and it has been found in practice that the load that the valve needs to see is approximately equal to twice the ra of the valve.

As an example, if the triode in question had an ra of 8,000Ω and the speech coil resistance was 16Ω (using convenient figures for ease), then twice ra is 16,000Ω and the tums ratio needed is equal to √1,000, which is approximately 33:1.

The penalty that one has to pay by making the effective triode load equal to twice the valve's ra is an increase in the drive voltage required for full output.

Design of output transformers for quality audio reproduction requires great care. In particular the primary inductance must be as high as possible (necessitating a bulky transformer) if it is to offer a constant impedance to the valve at all frequencies of interest.

Modern cores are not made of 'ordinary' electrical steel as may be found in a mains transformer but of a higher quality purer stuff with superior magnetic performance; this also makes it possible to keep the bulk down to reasonable proportions, certainly modern examples are a good deal smaller than their early equivalents.

Other factors such as self-capacitance and leakage inductance must also be optimised if reproduction at the high frequency end of the spectrum is not to suffer. This is usually achieved by not winding the former in the 'normal' way

like you would with a mains transformer Instead, both primary and secondary windings are split up into sections and interleaved with each other: some of these arrangements can be quite complex and, to go really ‘over the top’, one layout incorporates a split bobbin, where the order of the layers on one half are reversed on the other half. Add to this a choice of secondary taps for different speaker impedances, and it can be appreciated that manufacture can be extremely labour intensive, and, hence, valve output transformers can cost a small fortune if you want genuine Hi-Fi quality. For more information on the subject, see the small book *Coil Design and Construction Manual* by B B Babani (available from Maplin, Code RH53H, Price £2.50) which came out as a first edition in 1960, and gives detailed guidelines on how to make your own. We wouldn’t recommend designing and making your own output transformer however: there are, fortunately, still a few competent manufacturers around.

Tetrodes and Pentodes

In contrast to the triode, both of these types of valve have extremely high values of ra that require careful matching to the loudspeaker impedance. The rule regarding triodes does not work in these cases, and it has been found that these valves work best when they see an effective anode load that is between one-third and one-sixth of their ra value. Care is required in the design of output stages using such valves since, otherwise, they can generate an excessive amount of distortion. In general, the safest technique is to choose the load value which is recommended by the maker of the valve.

Although the beam tetrode may often be considered as the equivalent to a pentode (especially since they are alter- native answers to the same problem of the inter-electrode capacitance Cag), there are significant differences due to their different modes of operation. One of these differences is the type of amplitude distortion that each introduces into the amplified signal.

In the case of pentodes, the distortion is principally third harmonic with only a little second harmonic; this is the opposite to the beam tetrode, where mostly second harmonic distortion is produced. Thus, in terms of harmonic distortion, beam tetrodes behave more like triodes.

Push-Pull Amplification

There are several ways of approaching the design of valve power output stages:

a. Single-ended, where the output transformer is in the anode circuit.
b. Parallel operation, where two or more valves are connected in parallel in order to boost the power output, the output transformer being again in the common anode circuit.
c. Push-pull operation where two valves (or sets of paralleled valves) are driven alternately by the input signal, each valve having half of the primary winding of the output transformer in series with its anode, the

centre tap of this transformer being connected to the HT supply positive line.

We can dismiss both (a) and (b) immediately on the grounds that, since the primary winding carries the full anode current in one direction only its core would have to be excessively large or specially constructed in order to avoid saturation arising from the quiescent DC. Again the Coil Design and Construction Manual shows how this is done; the common arrangement is where the magnetic circuit is effectively broken by introducing a thin layer of waxed paper or similar to separate the core into independent stacks of 'E' and 'I' sections. The gap reduces the core's sensitivity to DC, yet allows alternating magnetic lines of force to pass through. LF response is critically linked to the choice of gap spacing, so tolerance must be tight. Many consumer quality radio-grams and record players *et al* used this type of output stage, but it is not worthy of serious consideration, especially as the type of harmonic distortion introduced by the output valve(s) cannot be reduced by this type of connection.

However in the case of (c), push-pull operation, the DC anode currents flow in *equal and opposite* directions in the half-primary windings, and so their fluxes cancel out. Saturation is thus avoided, even with relatively small cores, the core size now being dictated by the consideration given above, of providing a constant load at all frequencies. The second advantage that arises from the push-pull connection is the cancellation of all even order harmonics. The image below shows the arrangement of one possible type of push-pull output stage.

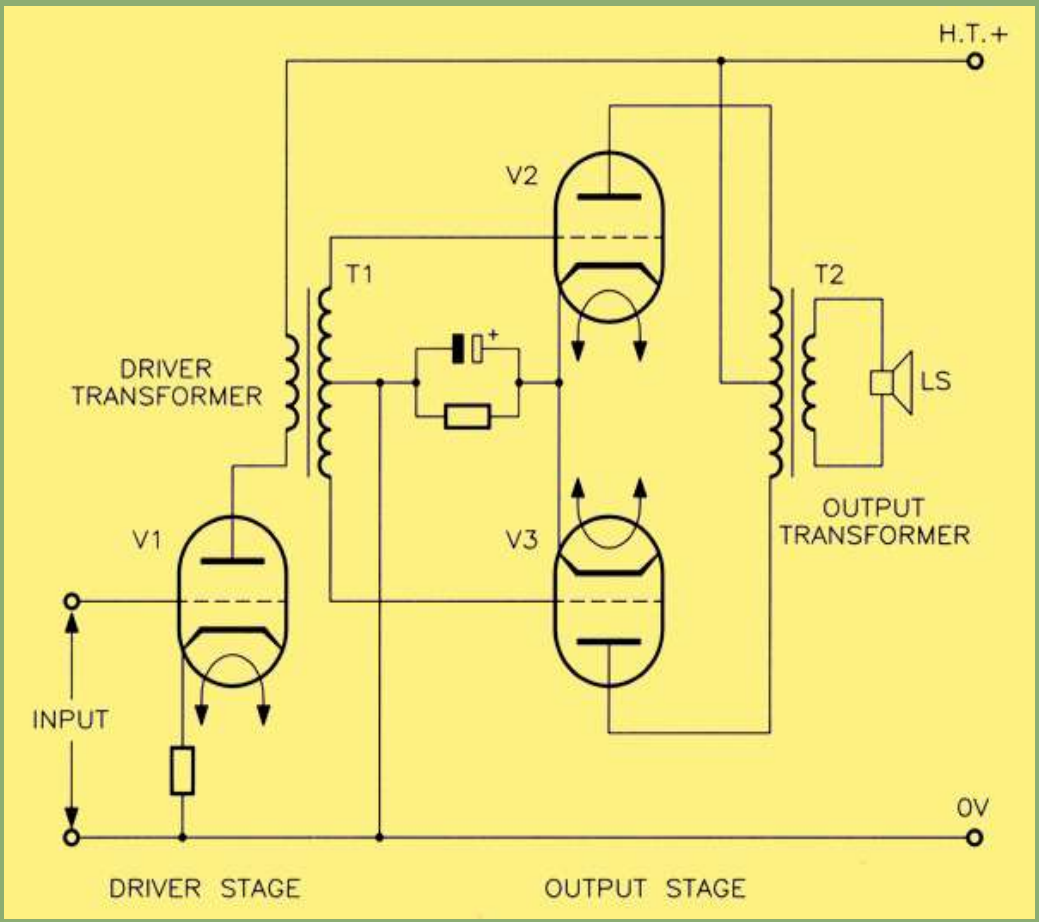

A Push-Pull output stage using triodes.

Valve V1 is the driver stage and valves V2 and V3 form the push-pull output stage. The phase-splitting action is performed here by the use of a driver transformer T1, in which the secondary winding is centre-tapped to 0V and so provides a pair of equal, anti-phase voltages to the grids of the output valves as well as DC bias. With no signal input to the driver stage, both output valves draw only their quiescent current, and this flows in opposite directions in the half-primaries of the output transformer T2.

When a signal is being amplified by V1, both ends of the driver transformer T1 are at opposite potentials with respect to the centre-tap, the latter being connected to the cathodes of both output valves via the cathode bias components R1 and C1. Thus, as the grid of one output valve is being driven in one direction, say positively, the grid of the other output valve will be driven in the opposite direction, in this case negatively. The terms *positively* and *negatively* are here used in a relative sense, since whether the signal voltages are actually positive or negative with respect to 0V will depend upon the way in which the output valves are biased. The classes of bias possible with output valves are illustrated by the mutual characteristic shown below.

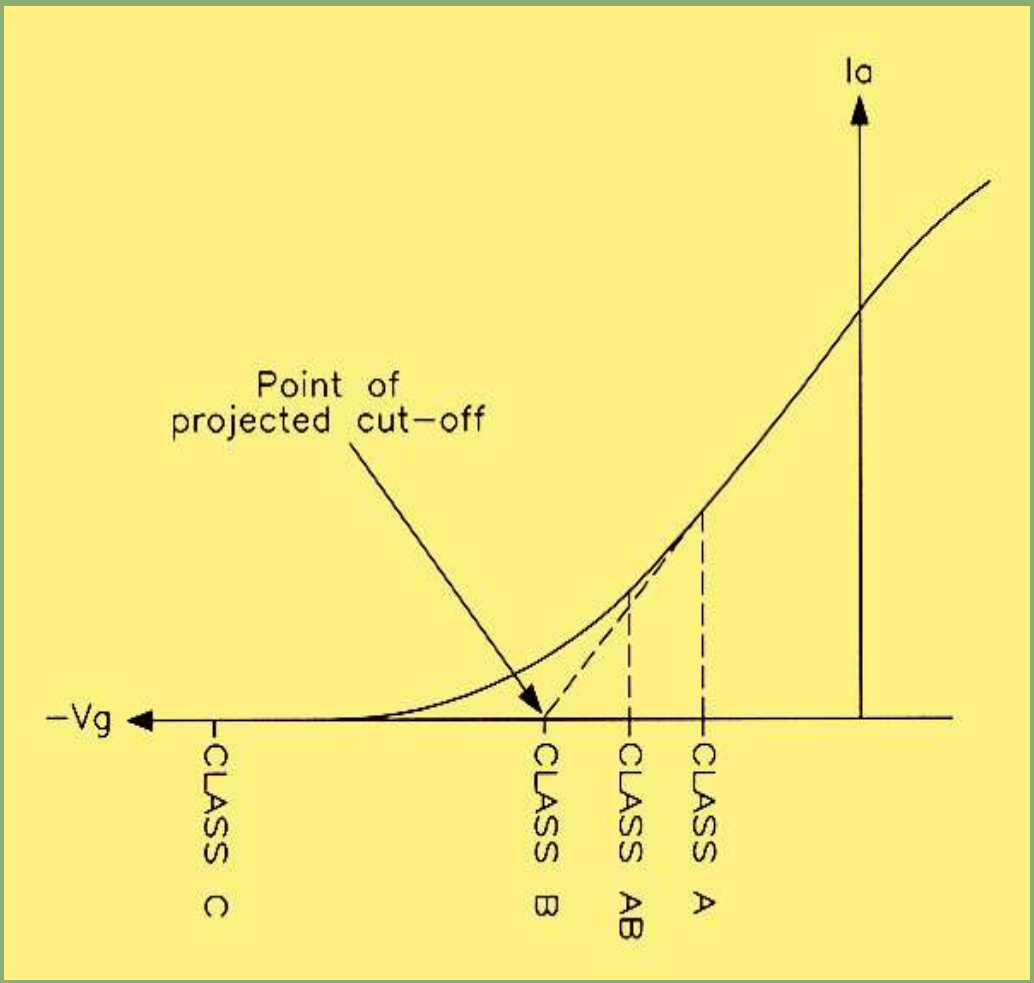

Classes of bias.

Classes of Bias

These are more commonly used to describe 'classes of amplifiers'. Taking Class A first of all, this is the bias method commonly employed with most single-ended amplifiers, ie not wired in push-pull. The valve is biased to the mid-point of the characteristic such that the quiescent anode current is large, and the signal swings cause equal changes in this current for both half-cycles. Distortion is minimised, but efficiency is low because of the high DC power input required to obtain a given AC power output. The available AC power output is also reduced, because the valve is contributing to both positive and negative half-cycles of the output signal, and having to do it within its available total signal excursions.

If, instead, the valve is biased to the point of projected cut-off, the valve is then operating in Class B. The quiescent anode current is extremely low giving very high efficiency but the amount of distortion introduced is high, making this mode unsuitable for quality reproduction. Its main application is in public address systems where quality is less important than cost.

A compromise class of bias then is Class AB, where the bias point lies between those for A and B. This gives an improvement in efficiency and possible power output over Class A, with better quality than can be obtained with Class B. Class AB actually divides into two sub-classes, depending upon how hard the grids are driven. In Class AB1, drive is restrained so as not to cause grid current to flow; in Class AB2, grid drive is increased and grid current flows at the peaks of the positive half-cycles.

Finally, in Class C operation, the grids are biased well beyond cutoff and are driven very hard in order to make anode current flow in short pulses, just at the peaks of the positive signal half-cycles. This type of bias is restricted to radio-frequency operation, where the pulses of current merely excite a resonant circuit in order to produce a full sinusoidal output. So now you know!

Harmonic Cancellation

Because of the fundamental way in which push-pull output stages work, the signal currents in the output valves flow in *opposite* directions in the output transformer's secondary winding. The magnetic flux that links with the *secondary* winding of this transformer induces voltages that are *additive* in this secondary Thus, a positive half-cycle developed in valve V2 at one instant causes a corresponding voltage to be developed in the secondary winding; this is followed by a negative half-cycle produced by valve V3, which also induces a similar voltage in the secondary winding. As a result, the secondary voltage appears as a continuous voltage, compounded from the successive efforts of the two push-pull output valves working separately but in co-operation.

However any even order harmonics, 2nd, 4th, 6th, etc., generated by the output valves cause *opposing* magnetic fluxes in the primary winding which, consequently cancel out. No even order harmonics appear in the secondary winding. This is a major advantage of push-pull operation. It is obvious that this is of more significance when triodes or beam tetrodes are used, since this is the type of harmonic distortion that these valves generate. This somewhat dampens the popular idea that the main characteristic of such amplifiers is that they generate lots of 2nd order harmonic distortion!

Value of Anode Load for the Output Stage

The actual value of the anode load in push-pull operation is not the same as that calculated for single-ended operation. Again, the best bet will be the figure provided by the valve makers since this will have been computed to give the minimum amount of odd order harmonic distortion. In pentodes, it is third harmonic distortion that is the major type, and it is possible to minimise this by a suitable choice of load. In fact, it is essential to do this, since push-pull operation does not result in any reduction in the odd order harmonic content. It has been found that reducing the value of anode load substantially below the nominal value reduces third harmonic distortion and increases second harmonic

distortion, the latter then of course being cancelled by the push-pull connection.

Negative Feedback

It is possible to write a book on this subject; many have already done so and I have no intention of adding to the published material. Suffice it to say that it is a matter of great importance in the design of audio amplifiers, of any type. Thus, the theory is not specific to valve amplifiers. Its benefits are well-known in reducing distortion of all types, in giving gain stability and in coping with the resonance problems of loudspeakers. That is all that need be said about it here.

Examples of Hi-Fi Audio Amplifiers

We shall now have a look at a few audio amplifier circuits which will illustrate the various approaches that designers have adopted in the past.

The Garner 10W Main Amplifier

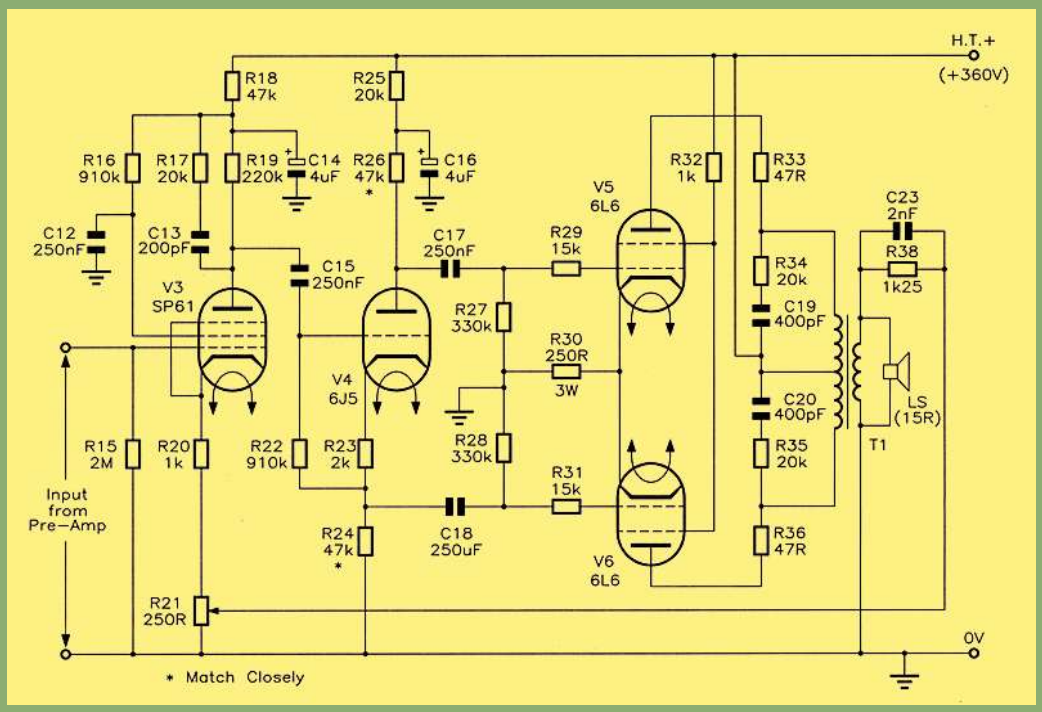

The Garner 10W Main Amplifier

The first of these is shown above and was designed by Major H H Garner in the early 1950s. It doesn't have any pretensions to exceptional performance but is, nonetheless, a creditable performer according to G A Briggs, who tested it exhaustively at the time. It was paired with a preamplifier; which had the obligatory bass and treble controls as well as input switching for pick-up and radio, and compensation for LP and 78rpm records.

The circuit is fairly simple and the line-up is quite conventional for those days.

(The ‘line-up’ was the collective expression used for all the valves.) No miniature valves were used; these were still a little way off in time for general use. The output valves were the popular 6L6s and these were somewhat under-run. The distortion figures may not seem exciting but were seen as being adequate for the purpose. At an output power of 5W the THD was 0.8%, which rose to 1.5% at 10W output.

The pentode first stage, V3, included overall negative feedback from the output transformer secondary winding. This could be varied between zero and 22dB of NFB (Negative FeedBack). Apart from the fact that this varies the sensitivity of the amplifier no justification was offered for this arrangement. The points that were made were as follows.

a. Since the 6L6 output valves made no great demands upon their input drive, a concertina phase-splitter was considered adequate, with balancing of the bi-phase outputs being achieved simply by matching the values of load resistors R24 and R26.
b. Because of the high input impedance of the phase-splitter; it was possible to use a pentode first stage to give both high gain and good top response.

A 10W Amplilier for Mobile Public Address

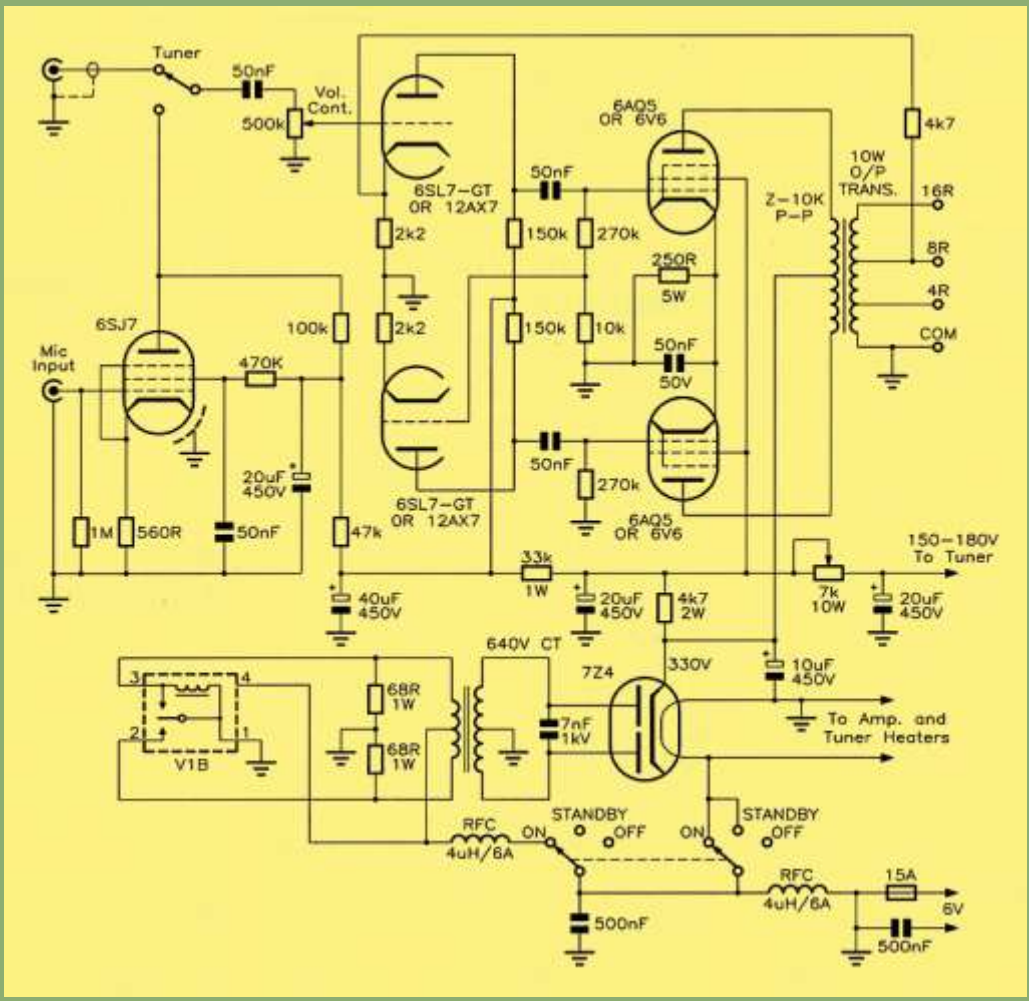

A 10W Mobile Public Address Amplifier

The circuit above shows an amplifier that appeared in the American magazine Radio-Electronics in March 1957. This was published in response to a letter from a reader who wanted a power amplifier both for his FM tuner and for mobile PA requirements. Since it had to be mobile, it couldn't use a mains supply, so a feature of the design was a vibrator pack, to convert the low level vehicle DC (6V no less) into the higher level HT required by the amplifier.

The first stage, V1, was a 6SJ7 pentode, used purely as a microphone preamplifier and giving enough gain to allow any high output, high impedance crystal or dynamic microphone to be used.

A separate tuner input was provided that tapped directly into the grid of one half of the double triode V2a. Here we see a choice offered between the older and larger 6SL7GT valve and one of the newer all-glass the 12AX7 (ECC83). The output valve is another popular choice of the day the 6V6; or a 6AQ5 could be used instead. The phase splitter is of the paraphase type with V2a as the first stage and V2b as the second stage. Anode loads are 150k and these feed the purely conventional output stage comprising pentodes V3 and V4. Overall NFB

was taken from the 8Ω tapping on the output transformer secondary winding to the cathode of V2a. A grid signal for V2b is contrived by tapping the grid leak resistor chain for V3.

The Craftsman C-500

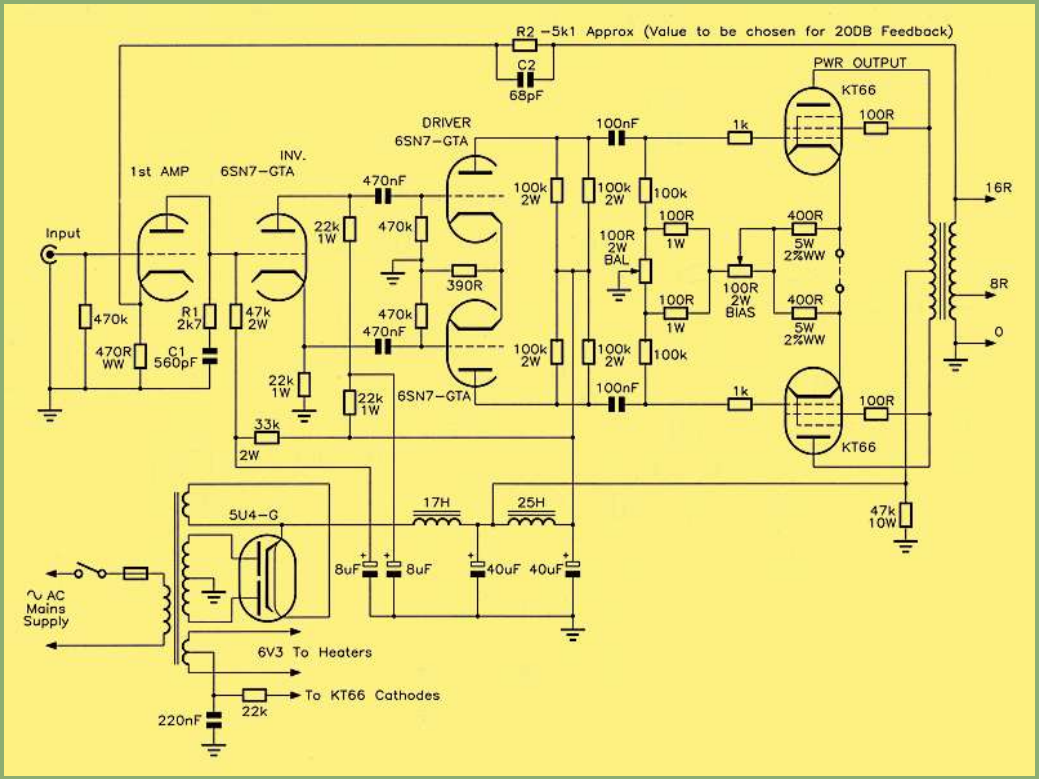

The Craftsman C-500 Williamson Amplifier

In the May 1956 issue of *Radio-Electronics* there appeared a circuit for a typical 'Williamson' amplifier, the 'Craftsman C-500', shown above. For those not in the know, Williamson was a famous name at the time in the field of Hi-Fi amplifiers and belonged to D T N Williamson who was employed as an engineer with the British firm of Ferranti. His Craftsman C-500' amplifier uses a pair of KT66s, which were very popular high power valves in those days. Although they are actually beam pentodes, they were connected as triodes by wiring the screen grid to the anode via a 100Ω resistor (The use of the KT66 in triode mode is validated by applications data; not all pentodes and tetrodes may automatically be connected up this way).

Note also the circuit symbols used for them. Do you remember in Part Four mentioned that often beam tetrodes are given pentode symbols in circuits, whereas the beam tetrode version should really be used for clarity? Although the KT66 is classified as a pentode, it has beam forming plates in place of a suppressor grid, and is practically indistinguishable from a beam tetrode in construction. *Some would say the KT66 is a classic beam tetrode-ed.*

In this circuit the first stage, V1a, is a pre-amplifier whose output drives a concertina phase splitter V1b, thus neatly putting both stages into one double triode. Note also that, as was mentioned in Part Six on the subject of phase splitter configurations, that here is an example of the signal grid of the splitter stage, V1b, being DC coupled to the anode of V1a, which then DC biases V1b. This makes a local bias resistor network and a coupling capacitor unnecessary, a saving in component count.

The third stage driver is a push·pull type whose antiphase outputs directly drive the push-pull output stage grids, and is included to develop a healthy driving voltage swing and increase the open loop gain of the whole system, bearing in mind the modest gain of the output valves, operating as they are in triode mode (see discussion about output triodes above). A ‘balance’ preset is provided to equalise the anode currents of the output pain while the ‘bias’ pre- set sets the net bias current in the output stage. In the Williamson design this is typically 125mA (62 to 63mA for each valve). These adjustments have to be made with the aid of a multimeter after temporarily removing the link shown. Overall NFB is taken from the 16Ω tapping on the output transformer back to the cathode of V1a.

It was a feature of the Williamson designs that the output transformer was of a superlative specification. The bandwidth was enormous, sometimes in excess of 100kHz, with extremely low distortion and of massive size. It is said that Williamson amplifiers were designed around the output transformers. The wide bandwidth introduced in stability problems, however in the presence of NFB. It was possible to alleviate this by including a bypass network within the loop that was only effective at frequencies at or above 100kHz. This is the RC network R1 / C1 between anode and ground of V1a. Its function is to load V1a at high frequencies, reducing its gain and ensuring a top end roll-off. As a further anti-instability measure, a small value capacitor C2 was also added in parallel with the feedback resistor R2.

The Ultra Linear Amplifier

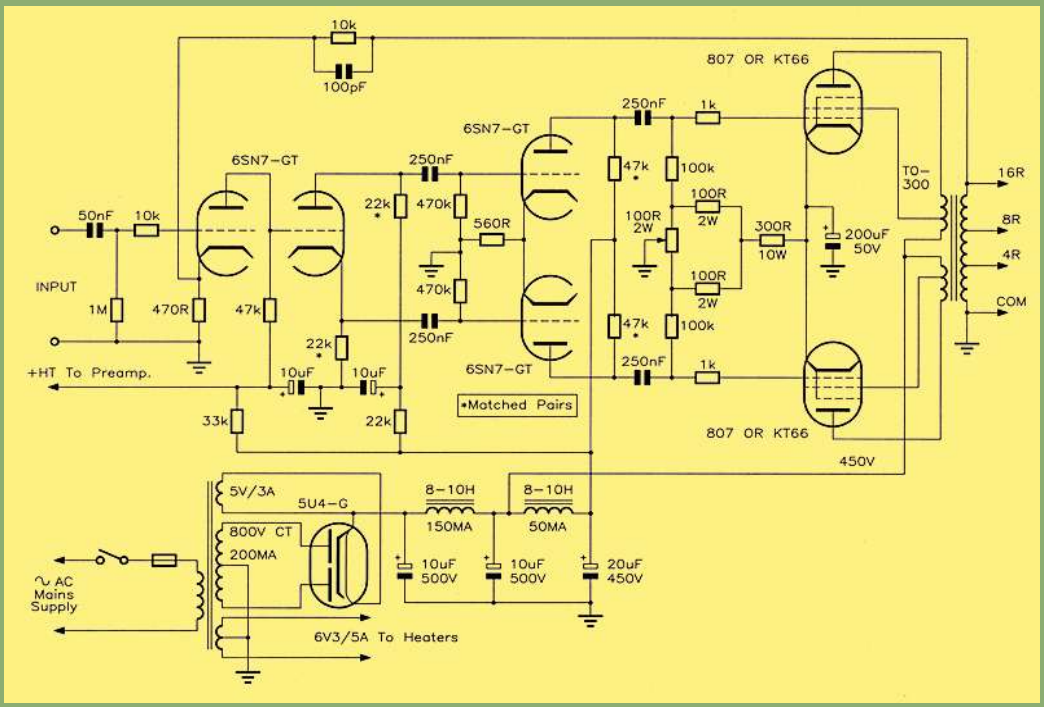

The Williamson Ultra-Linear Amplifier

In 1952 or thereabouts, an unusual output circuit, which had been patented some years previously was resurrected by David Hafler and Herb Keroes. This circuit combined the best features of triode and tetrode/pentode operation and was known as the *Ultra-Linear configuration*. The important change to the normal push-pull connection was minimal and consisted of connecting the screen grids to taps on the primary of the output transformer Oddly enough, opinions are divided on how the circuit actually works, but the secret is believed to rest on the introduction of NFB. Whatever the modus operandi, there is no doubt about the benefits. The operating curve is more linear than for triode operation even, and the output power capabilities are about one-half those of pentodes and double those of triodes. 'l`his means that, for the same HT supply and signal drive, the output of an ultra-linear amplifier is double that of the same amplifier when triode connected. In fact, distortion at low levels is reduced as is the phase-shift at high frequencies. This makes it possible to increase the degnee of NFB without incurring any further instability penalties. The Ultra-Linear Williamson ampliiier is shown above.

Another aspect of the design of amplifiers such as the Williamson types is interesting. At the time, valves might be classified loosely as being either transmitting types or receiving types. The former type of valve was obviously designed for handling high powers, a prime requirement for audio output stages. It was natural, therefore, to adopt transmitting valves for Hi-Fi purposes, with consequent advantages. They didn’t make too stringent a demand upon the driver stages as far as the amplitude of the driving voltage was concerned, and they were operating on the linear parts of their characteristics when delivering

the high powers required.

A Low-distortion 12W Amplifier

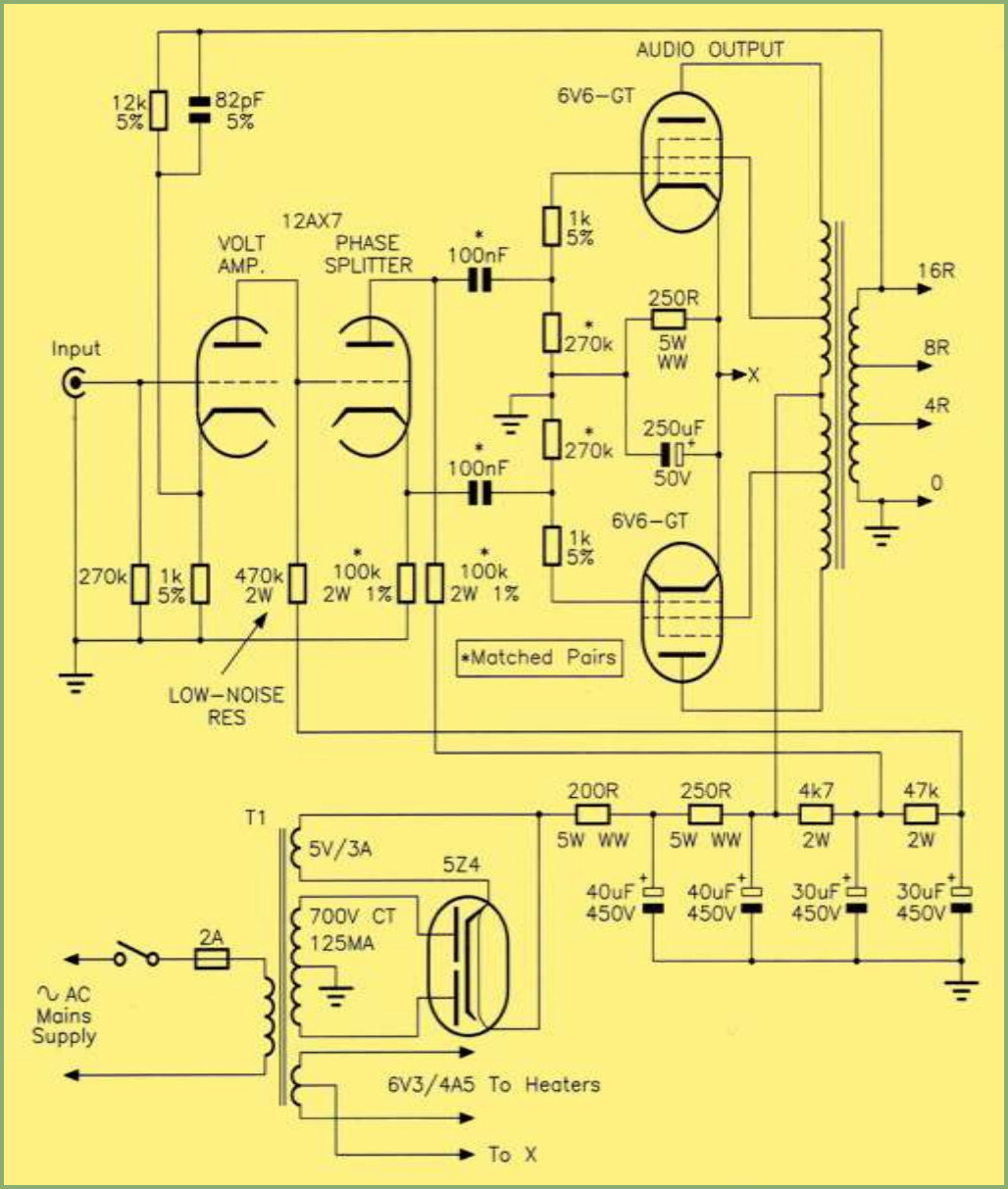

Design for an Ultra-Linear 12W Amplifier

Finally another ultra-linear amplifier circuit, but rather simpler than the Williamson version. The power output from this is a modest 12W but even this is often considered to be adequate for the average living room. I reproduce here the designer's original criteria, taken from the August, 1958 issue of *Radio-Electronics*.

1. lnaudible distortion at all feasible levels (in a 10 x 15ft. room).
2. Low source impedance.

3. High efficiency.
4. Best possible stability characteristics.
5. Hum and noise below audibility (under specified conditions).

The designer concentrated most of his efforts on consideration of the degree of NFB needed to meet his criteria 1 to 4 above, and opted for the ultra-linear mode of operation, using a pair of 6V6s. To obtain this type of operation with these valves requires the output transformer primary winding to be tapped at 25% on each side of the centre·tap. The choice of output transformer from what was on the market at the time, fell on the Acrosound TO-310, which had a rating of 10W over the bandwidth 20Hz to 30kHz, and 20W over the reduced bandwidth of 30Hz to 20kHz, the latter being adequate for good reproduction.

The circuit itself uses a 12AX7 (ECC83) double triode, with one section, V1a, being a voltage amplifier directly coupled to a concertina phase-splitter This gave a number of advantages.

The DC coupling eliminates one stage of capacitive coupling which gives greater frequency stability Placing the phase splitter directly before the output stage (which is possible due to the low drive requirements of 6V6s) eliminated the hum frequently resulting from the large potential difference between the heater and the un-bypassed cathode of V1b, being amplified by a further push-pull driver stage. The anode load of the voltage amplifier acts as the grid leak of the phase splitter thus allowing the voltage amplifier to work into a very high impedance, so that high gain with low distortion are obtained from the first stage of amplification.

Efforts were made to improve the performance by matching pairs of resistors and some capacitors (if possible) to within 1% of each other These are indicated on the circuit diagram. It seems, from the comments made upon completion and testing, that the amplifiers performance lived up to expectations.

That just about concludes this series on Valve Technology, which has been restricted to audio applications only, and this is now one of the few fields left where valves still survive - we haven't even mentioned radio, TV, Instrumentation and industrial applications, which of course at one time valves had to cater for also! The only other area where valves are still in common use is for radio transmitters (a very large, high voltage, high power triode operating in class C).

We hope you have found the series both interesting and informative, and that it has answered a lot of questions you may have had about these devices. You may now be sufficiently better informed to try some experiments of your own. Elsewhere in this issue you will find details for Maplin's own valve power amplifier project, which closely resembles Mullard's '520' ultra-linear design of the late 1950s and early 60s. Happy metal-bashing!

Return to Series Contents or back to Phase Splitters

Return to Articles Contents Page