Camm Dynatone RPo

Copyright Mike MacLeod 2012

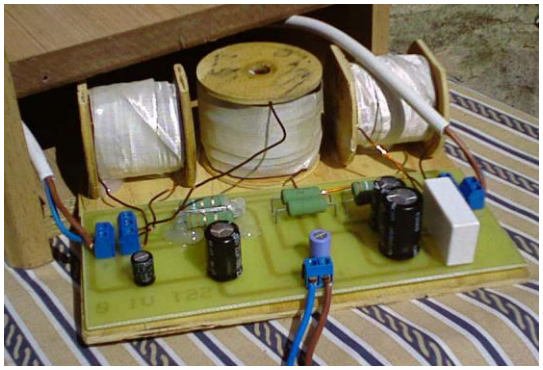

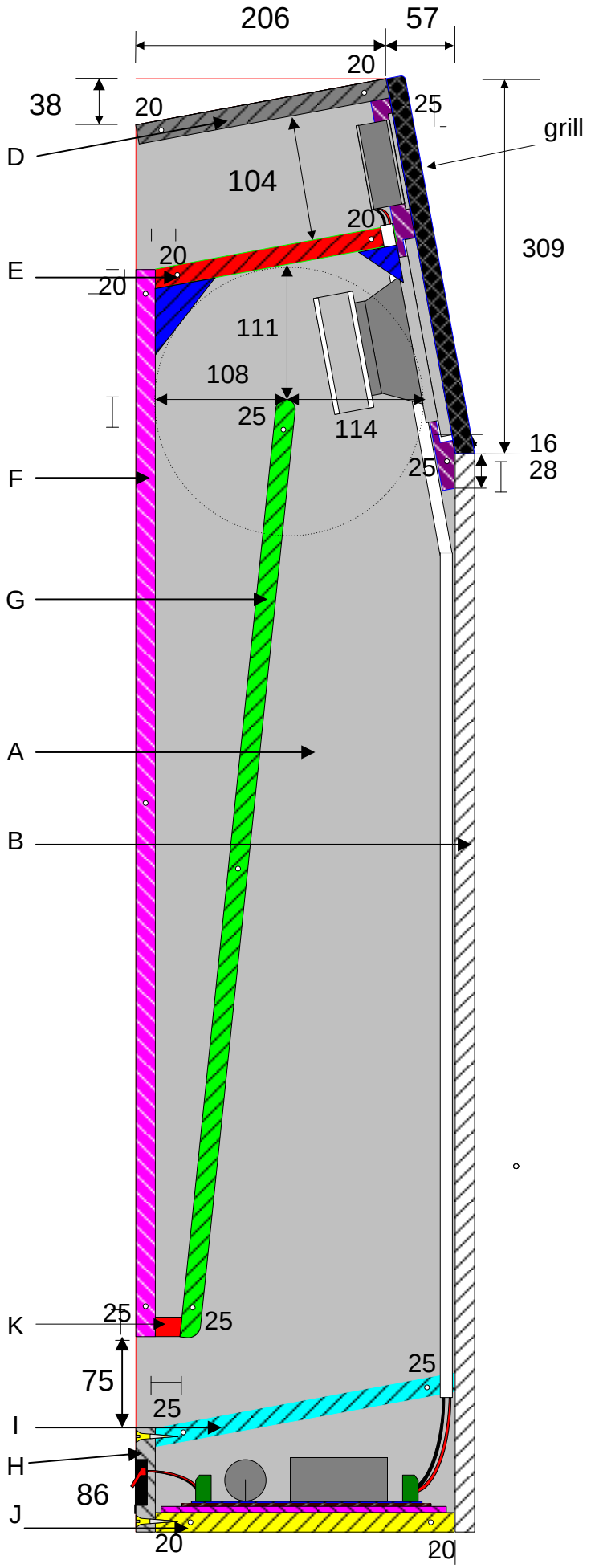

	L	W	QTY
A	1197	263	4
B	888	212	2
C	326	180	2
D	180	210	2
E	203	180	2
F	879	180	2
G	777	180	2
H	86	180	2
I	254	180	2
J	180	247	2
K	22	180	2

Production model

Camm Dynatone RPo

Copyright Mike MacLeod 1998.

Copyright © 1998 Mike MacLeod

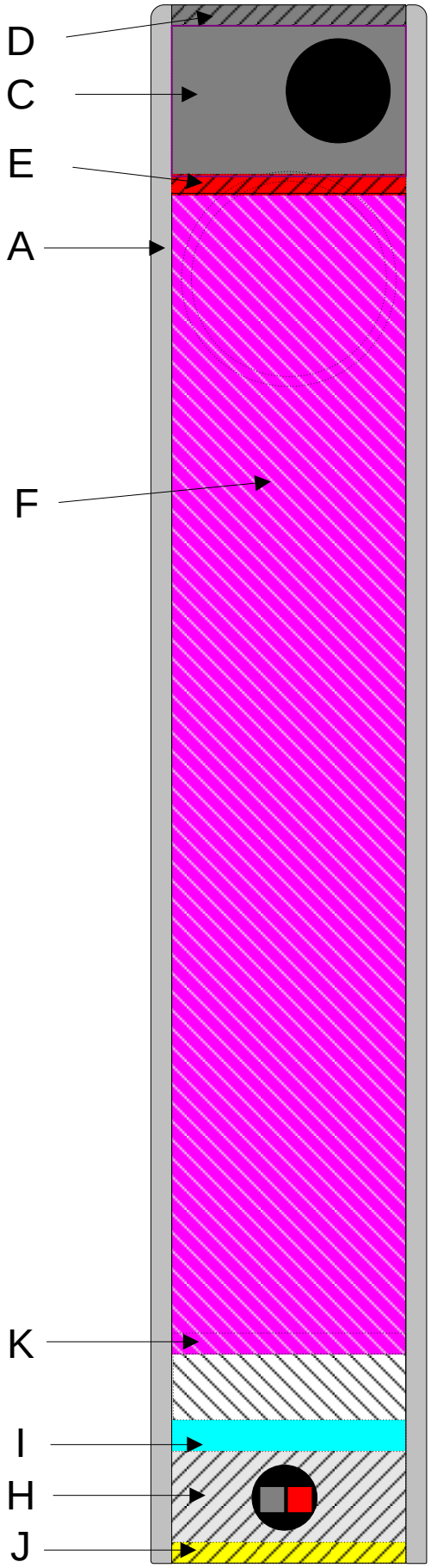

	L	W	QTY
A	1197	263	4
B	888	212	2
C	326	180	2
D	180	210	2
E	203	180	2
F	879	180	2
G	777	180	2
H	86	180	2
I	254	180	2
J	180	247	2
K	22	180	2

Production model

Camm Dynatone RPo

Copyright Mike MacLeod 1998.

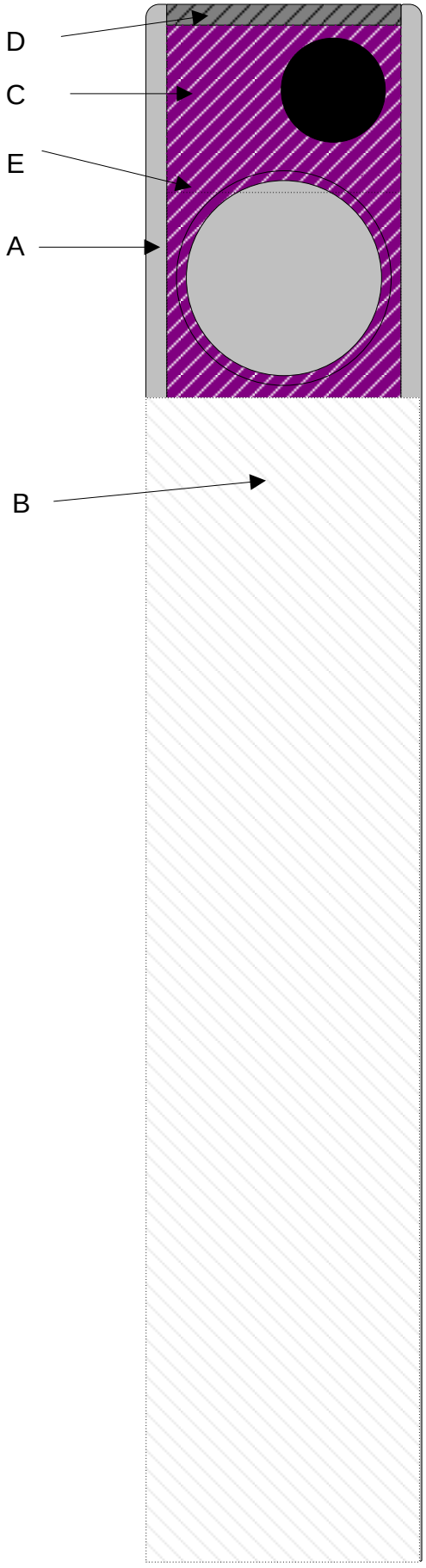

	L	W	QTY
A	1197	263	4
B	888	212	2
C	326	180	2
D	180	210	2
E	203	180	2
F	879	180	2
G	777	180	2
H	86	180	2
I	254	180	2
J	180	247	2
K	22	180	2

Camm Dynatone RPo

Copyright Mike MacLeod 1998.

Notes:

All wood: 16mm Supawood veneered per your choice.

All joints preferably strengthened with biscuits. Use special adhesive for melamine.

Take special note of the grain direction, especially if you are having someone else cut the wood.

Kitchen cupboard manufacturers can cut the wood for you, all radii will be edged with matching veneer tape. The ***radiused*** edges come in several profiles. Kitchen cupboard manufacturers have a special process that radius's the edge and applies a special edging tape all in one go.

Where ***edging*** is called for, this is a separate iron-on or glue-on melamine veneer – shown as grey in the drawings.

Edges that get glued have no ***edging***.

The top angled front face of the two side panels marked **A** need a veneer glued on, as their edges are not radiused. This to match up with speaker baffle **C**.

Part **H** is removable so that crossover can be fitted inside compartment.

Part **H** gets a speaker connector fitted: round or rectangular, your choice.

Part labelled **G** may be ordinary chipboard or an offcut.

Use white twin core extension cable, known as cabtyre, as hook-up wire. Keep the outer sheath intact i.e. do not peel the outer part off, except sufficient to reach the pcb plus enough to pull the crossover out of the compartment and the same at the tweeter end. Drill holes in front corner of parts **E** and **I** , slightly smaller than the outside diameter of the cable. Drill the hole on part **E** in the corner that the tweeter is on, i.e. right for r/h speaker and left for l/h one. Force cable through to ensure airtight seal, even putting a little silicone glue on the inside of the hole. Use hot glue to hold wire into the corner as it is run up the inside of the box. Woofer cable will obviously run up the opposite corner to that of the tweeter.

Manufacture corner cleats to 'fit' for holding part **E** and then glue and screw them in for max strength.

Start assembling the speaker by laying one side down flat on your work bench (on a carpet so it doesn't get scratched of course) and temporally position the front baffle **B** and **C** in position and then glue and screw **C** to **B**. Working quickly glue and fit the all of the pieces except **H**. The biscuit joints help to align the pieces nicely. At this point using a caulking compound seal all the internal joints. When everything is glued and screwed, fit the final side then stand the speaker upright and fit as many clamps as you can and allow the glue to dry completely. Now by working from the open speaker hole and the bottom port, seal the final internal side joint. Fit the internal wiring and use silicone to seal the cabtyre where it goes through **E** and **I**. Now make a sausage of the damping material and stuff it into the open speaker hole making sure that you get it right down in the tapered part while the rest hangs down into the main compartment. Connect your speaker and screw it to baffle **C** using a gasket compound to ensure an airtight seal. Connect the crossover and fit into it's compartment. I use an off cut carpet tile as a vibration damper on the floor of the crossover compartment. I screw the crossover to a piece of thin plywood and lay it on the carpet. Screw the baffle **H** into position, do not glue it as you may need to pull the crossover out at some point in time. (On page 30 is an alternate side panel that has had all of it's edges radiused and veneered, then the front edge is trimmed by 7mm for baffle **B** to be glued on.) Test and enjoy your creation - Mac.

Camm Dynatone RPo

Copyright Mike MacLeod 1998.

	L	W	QTY
A	1197	263	4
B	888	212	2
C	326	210	2
D	180	210	2
E	203	180	2
F	879	180	2
G	777	180	2
H	86	180	2
I	254	180	2
J	180	247	2
K	22	180	2

Copyright © 1998 Mike MacLeod

Camm Dynatone RPo

Copyright Mike MacLeod 1998.

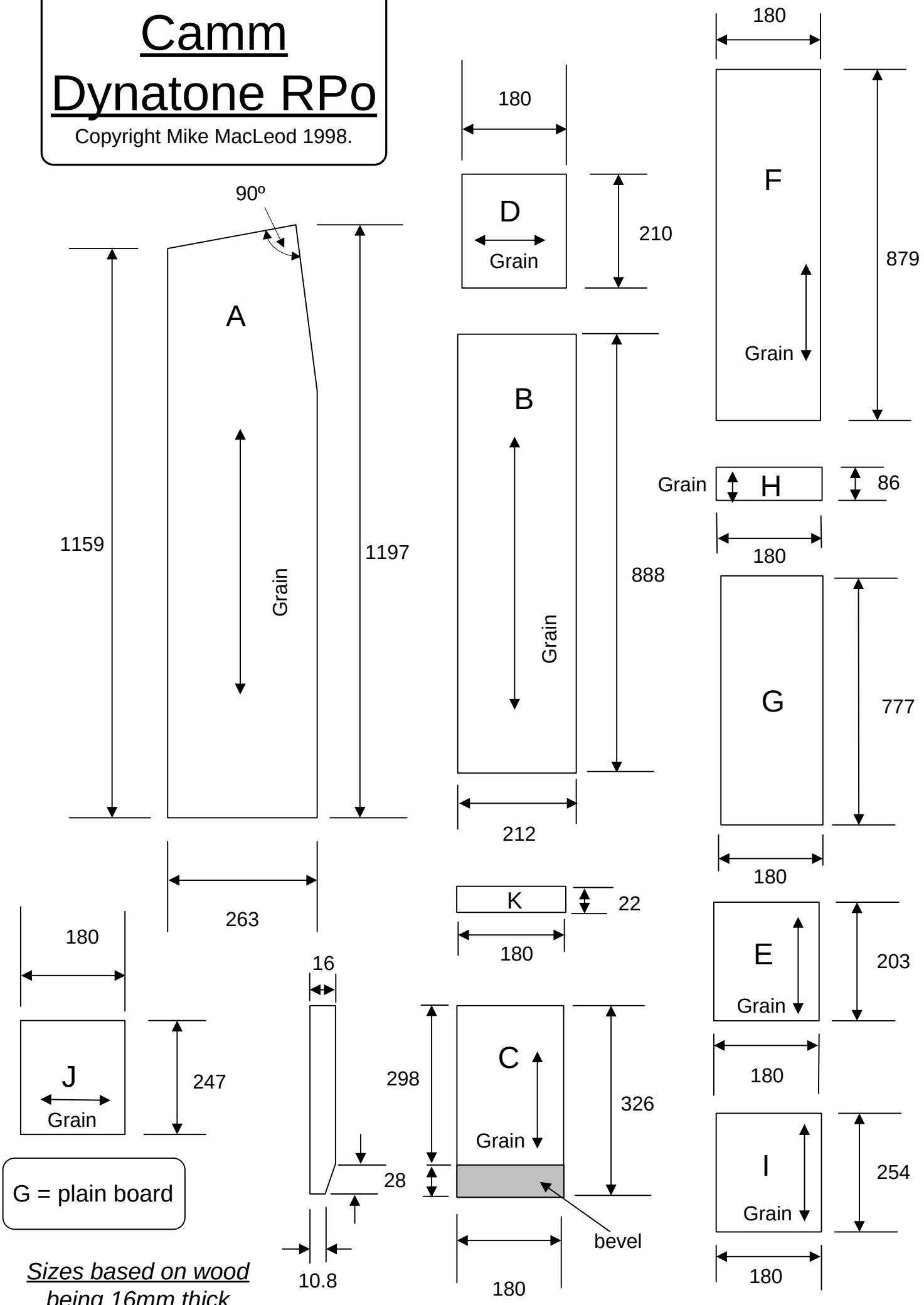

Sizes based on wood being 16mm thick

Copyright © 1998 Mike MacLeod

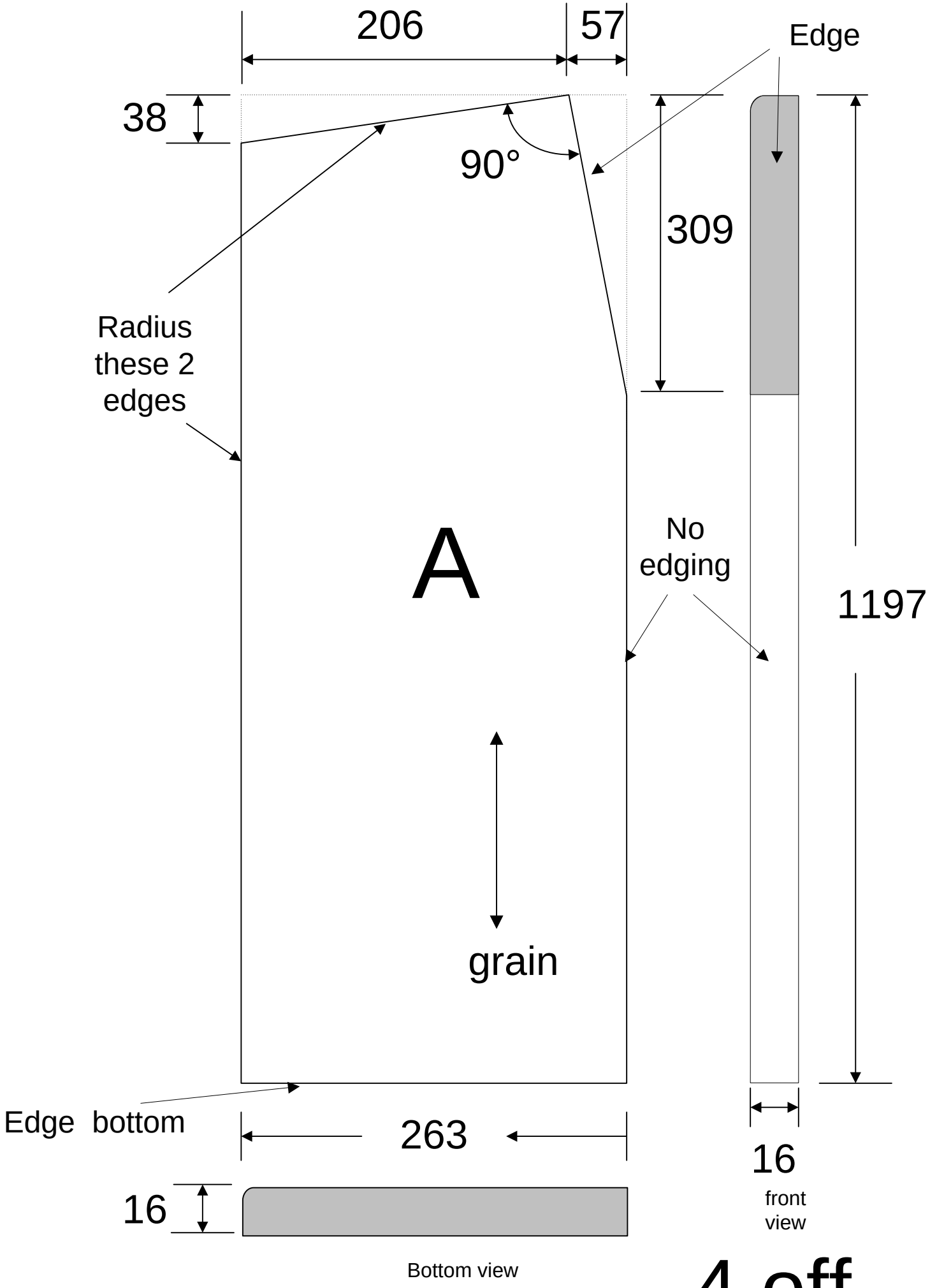

4 off

Copyright © 1998 Mike MacLeod

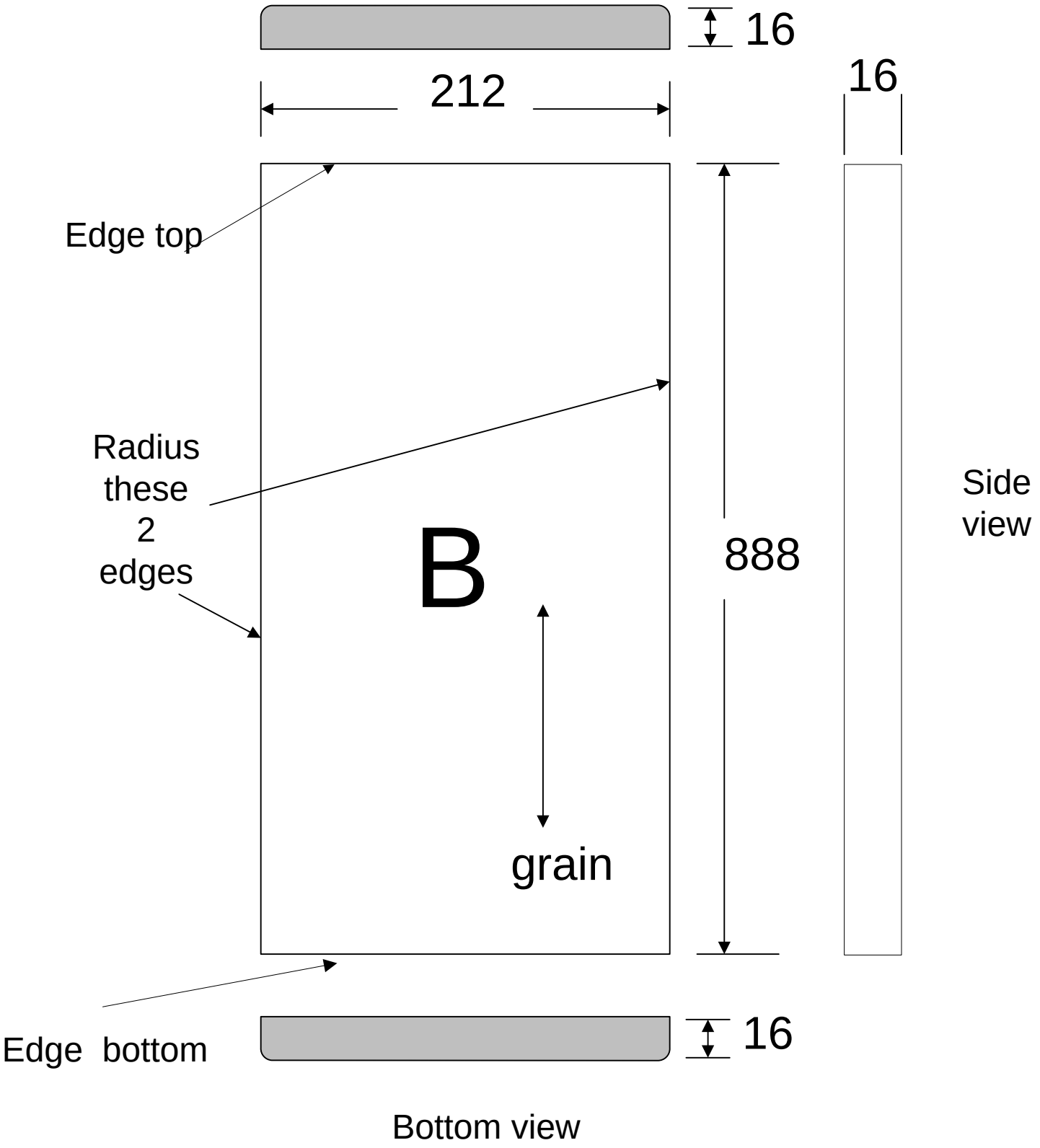

2 off

Copyright © 1998 Mike MacLeod

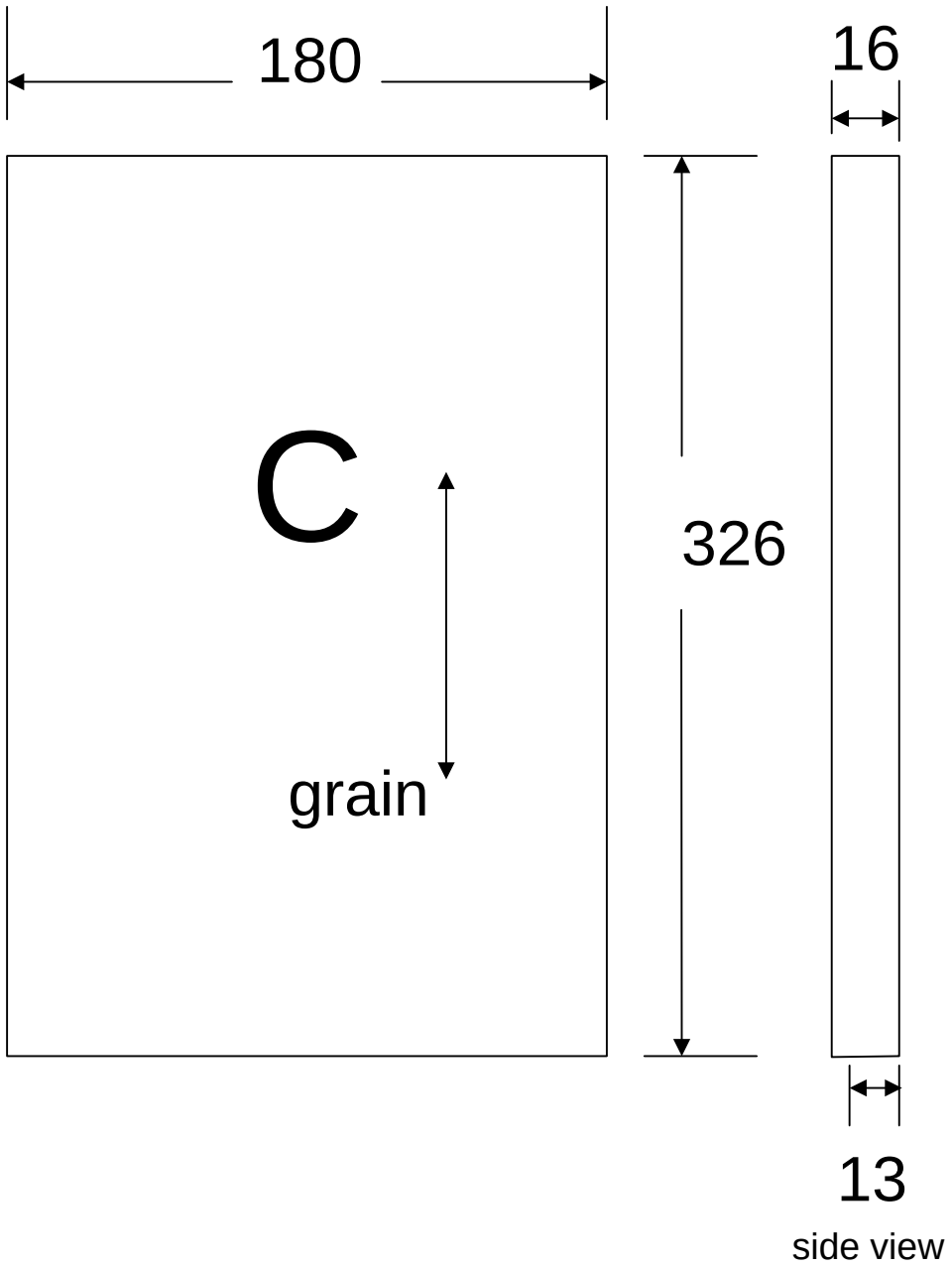

No radius or edging

2 off

Copyright © 1998 Mike MacLeod

Right Hand Speaker - L/H opposite.

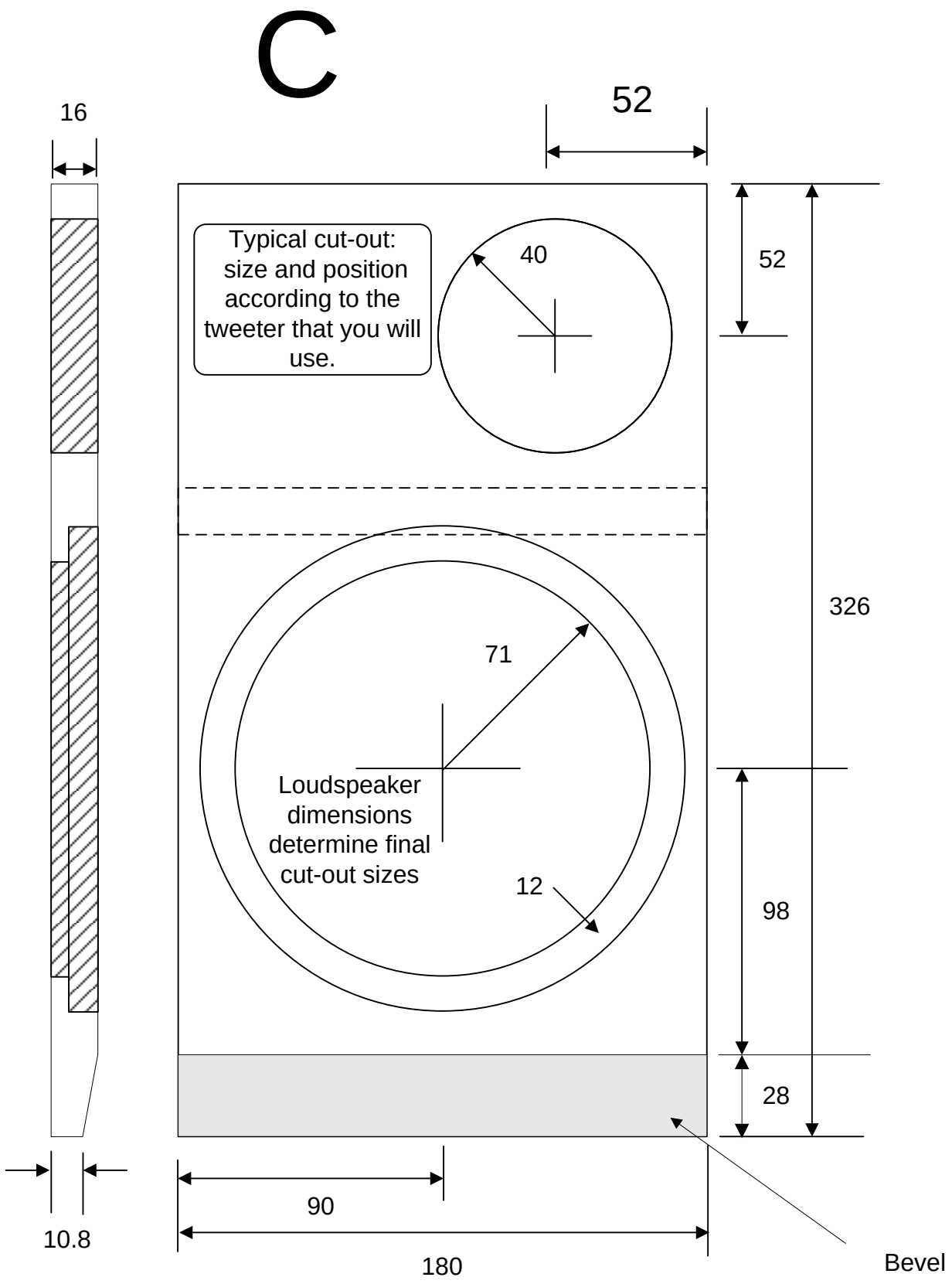

Copyright © 1998 Mike MacLeod

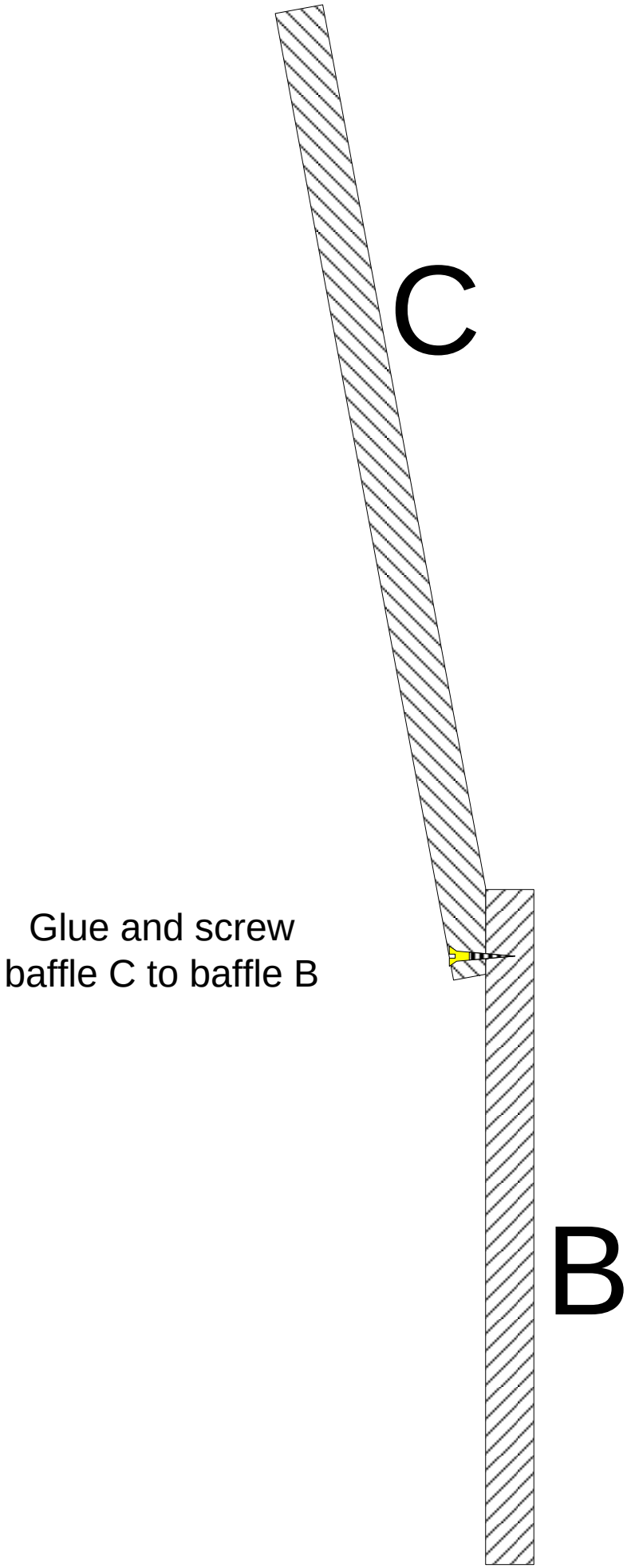
C
Glue and screw
baffle C to baffle B
B

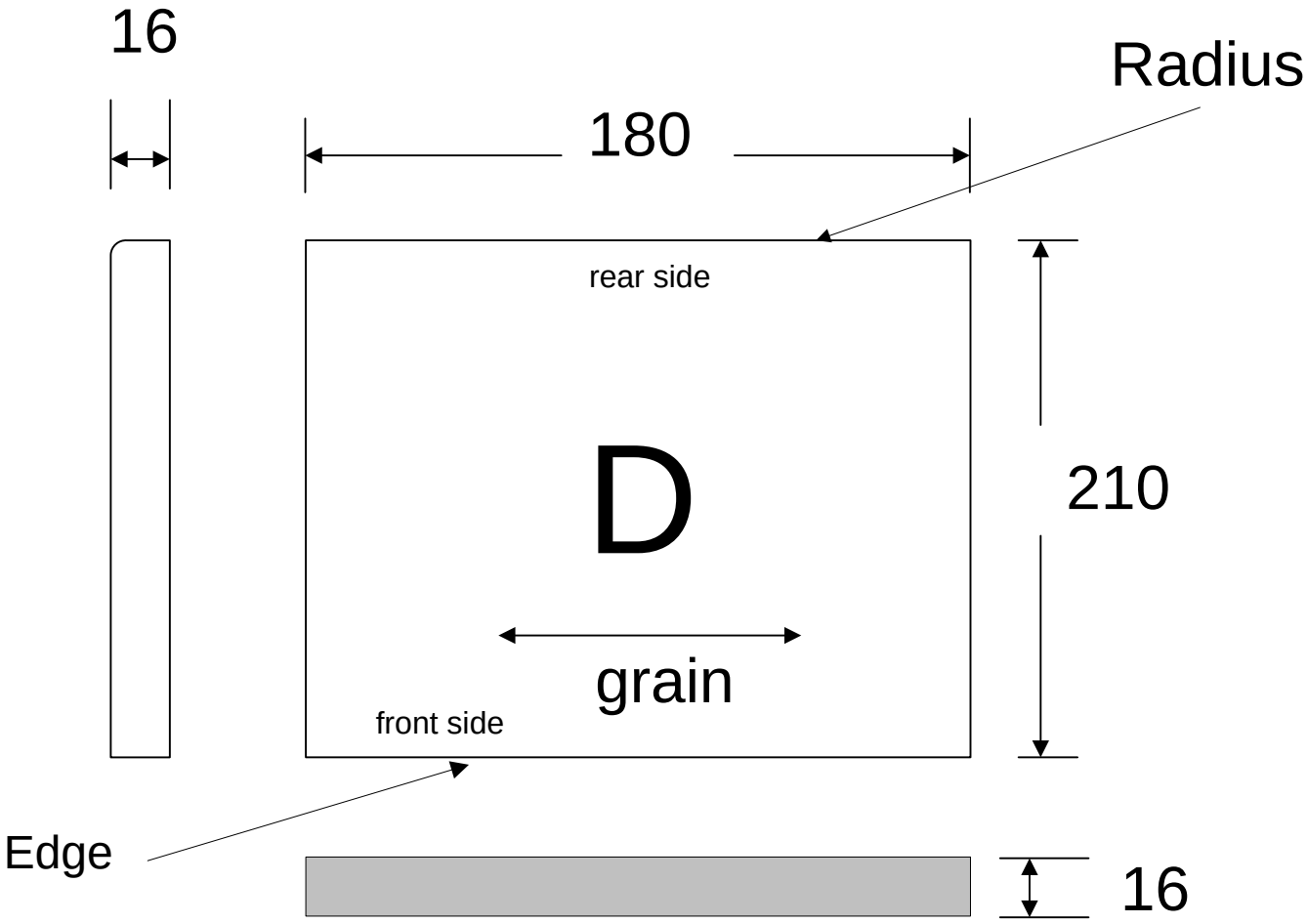

Note the grain direction change

2 off

Copyright © 1998 Mike MacLeod

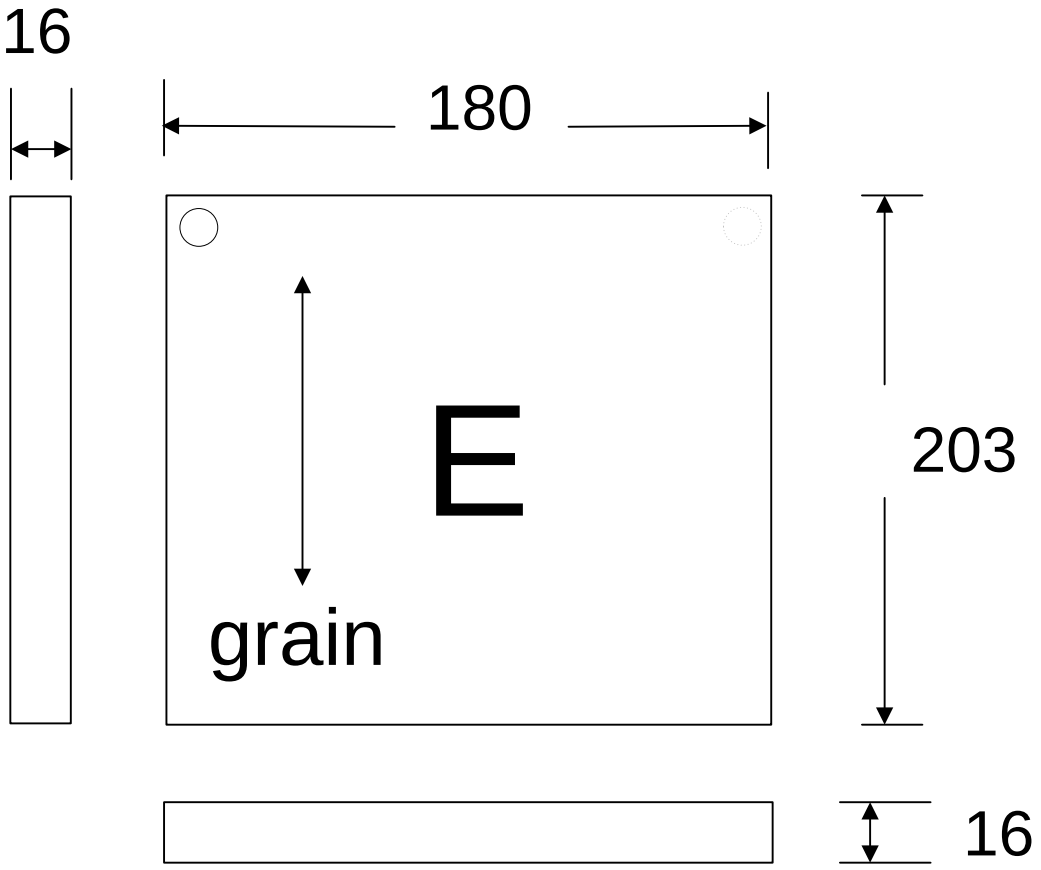

No radius or edging

Note the hole for hook-up wire for tweeter - on opposite sides - see notes

2 off

Copyright © 1998 Mike MacLeod

Corner cleats for holding part E. Manufacture to fit and then glue and screw for max strength.

Copyright © 1998 Mike MacLeod

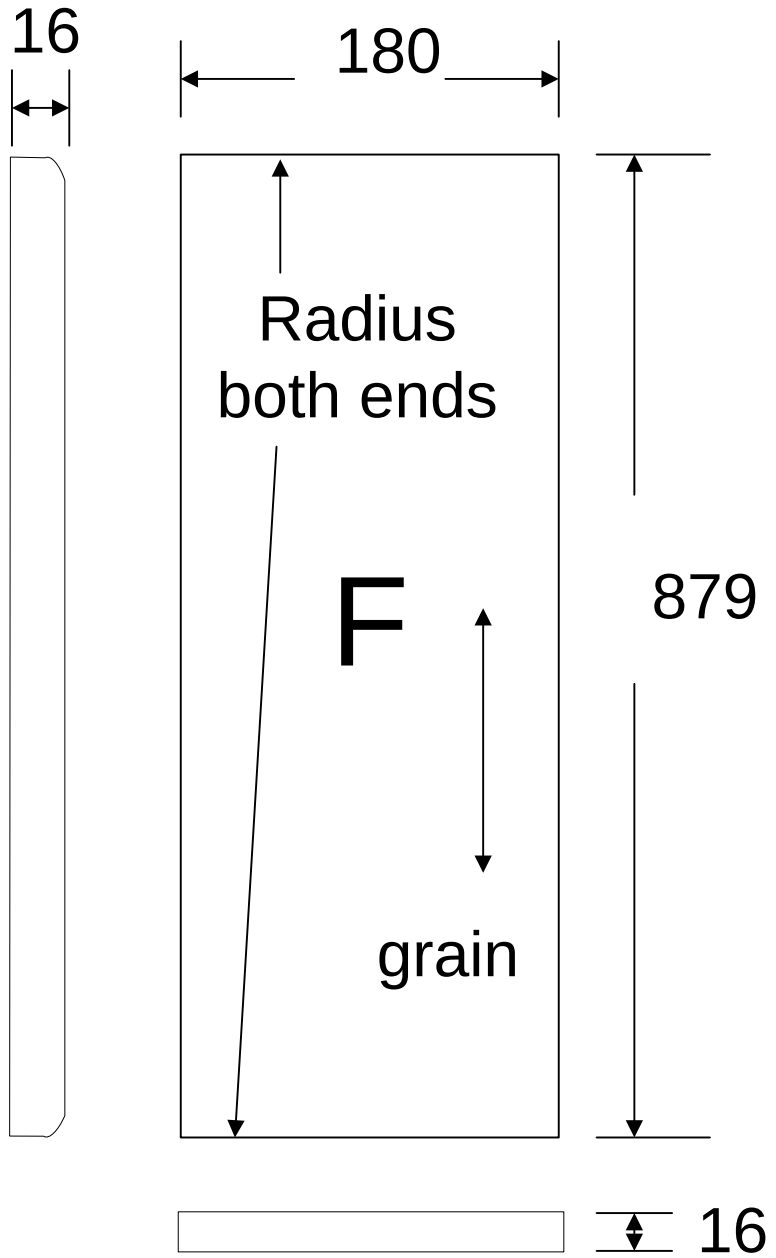

Copyright © 1998 Mike MacLeod

2 OFF

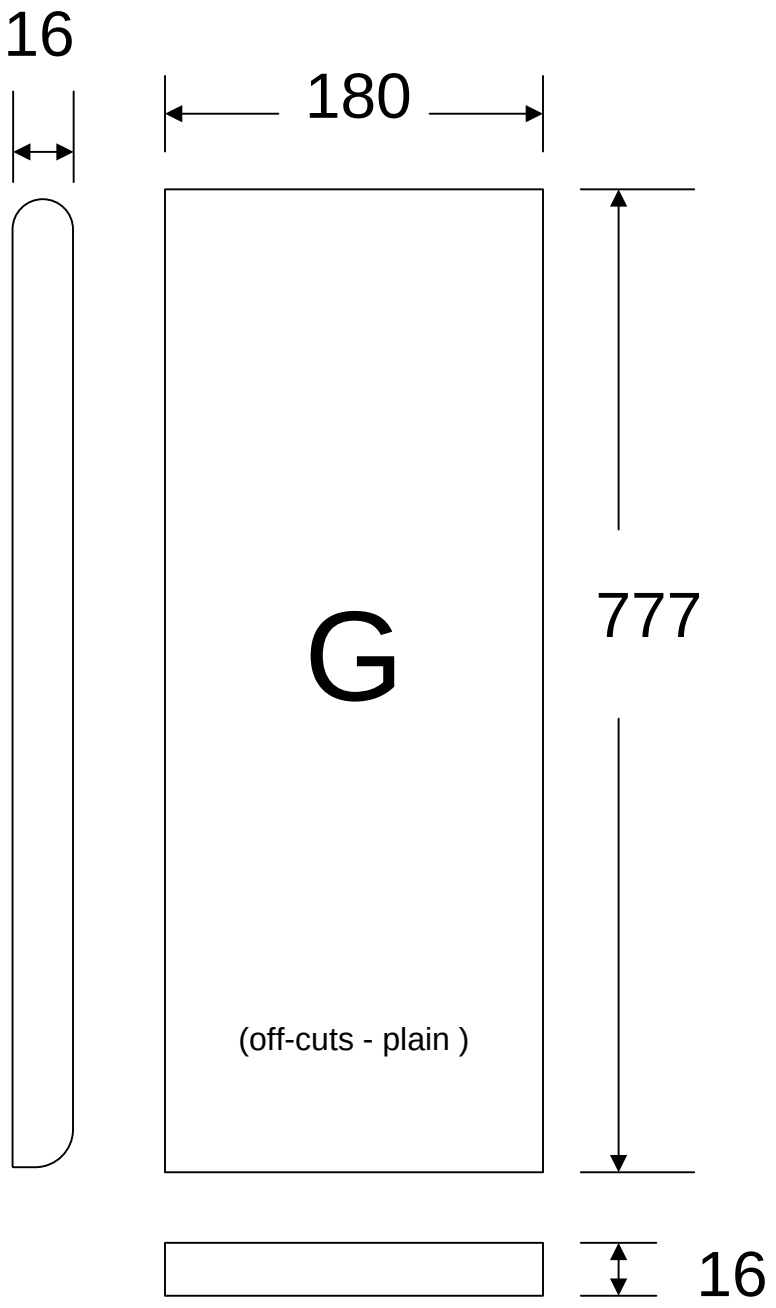

No edging, round top edges as well
as lower edge at bottom exit of port

2 OFF

Copyright © 1998 Mike MacLeod

Drill and counter sink two or four holes for the retaining screws.

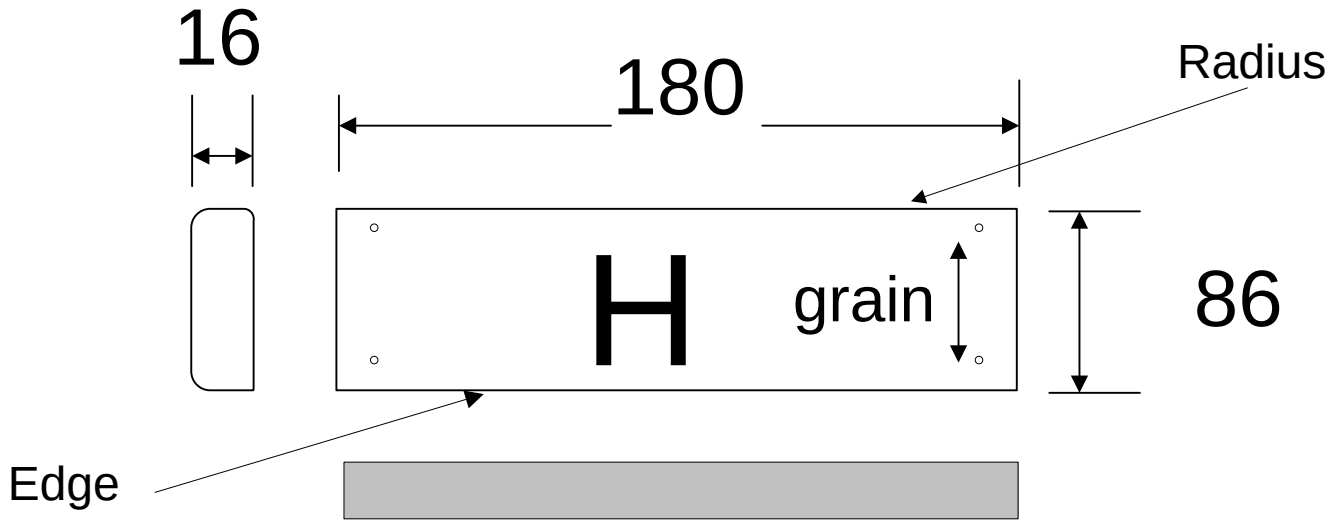

2 off

Copyright © 1998 Mike MacLeod

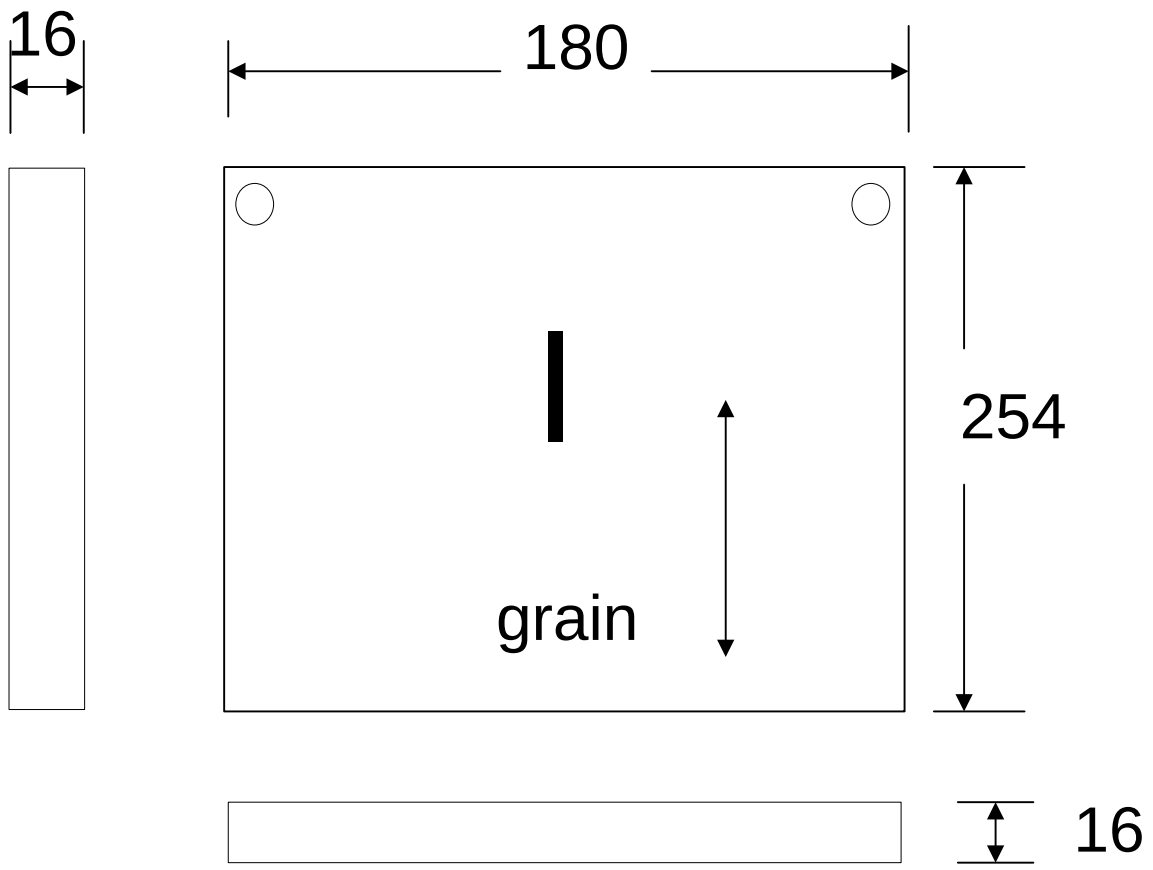

No radius or edging

Note the holes for hook-up wire for tweeter and woofer - see notes

2 off

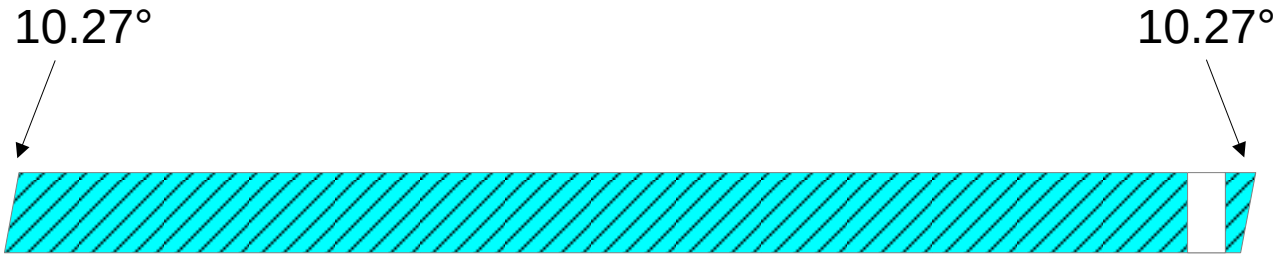

Copyright © 1998 Mike MacLeod

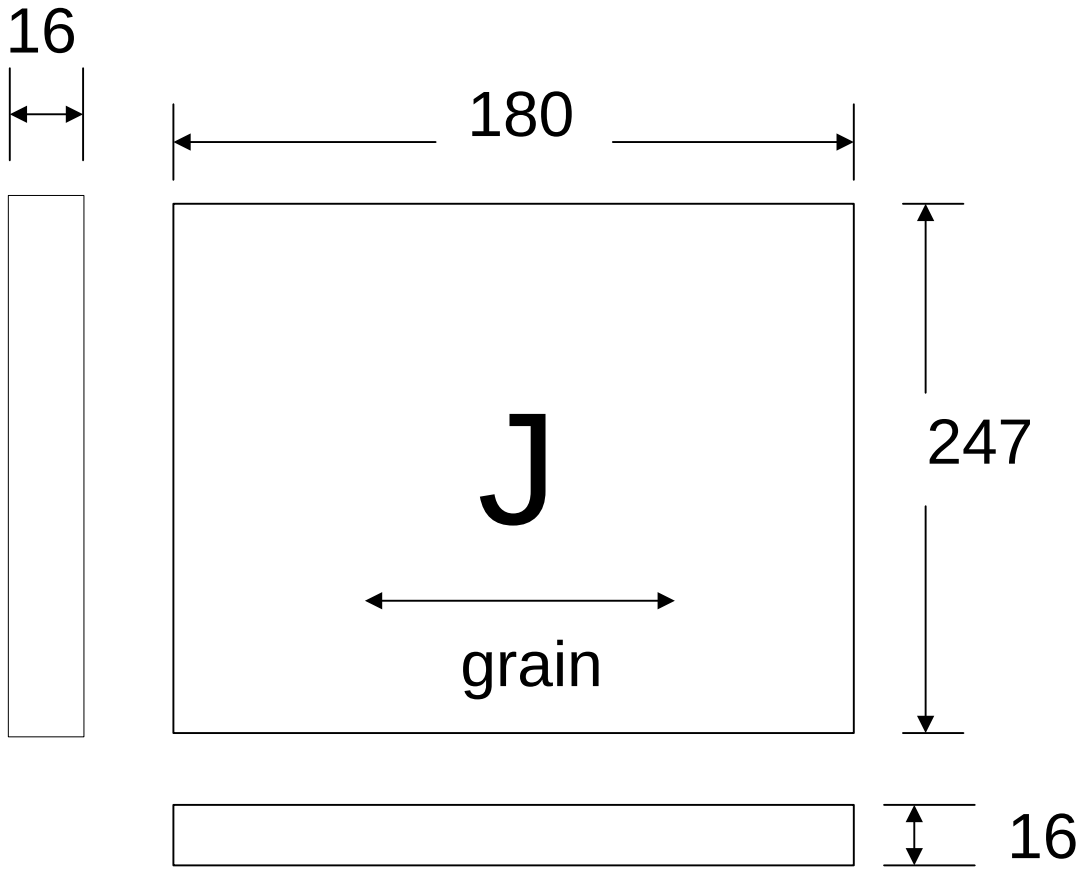

No radius or edging
Note the grain direction change

2 off

Copyright © 1998 Mike MacLeod

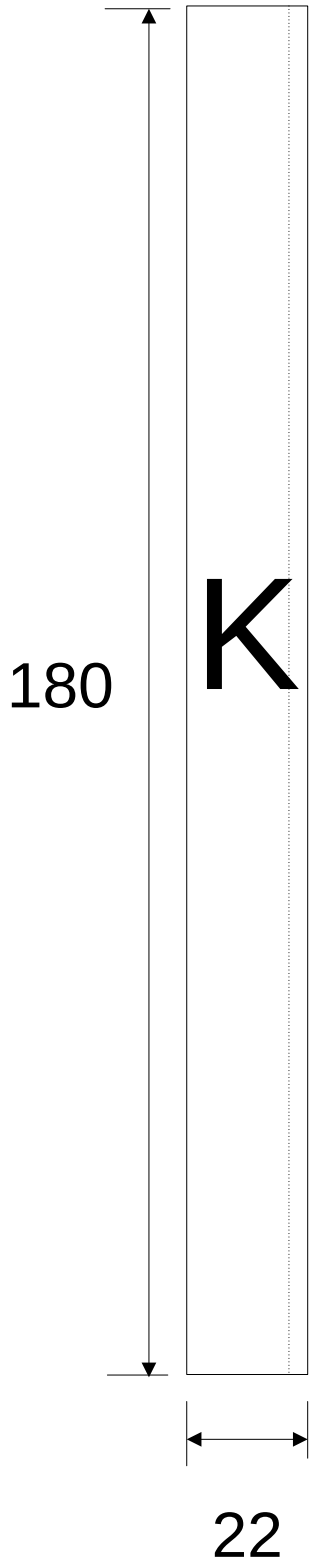

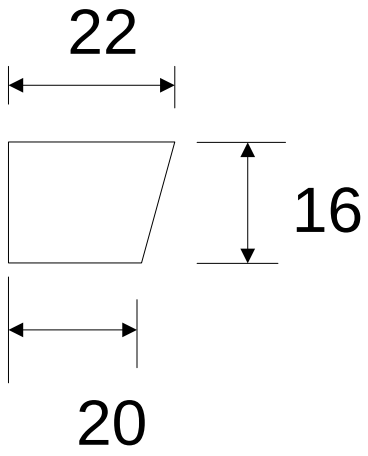

2 off

No radius or edging

Offcuts - plain

Copyright © 1998 Mike MacLeod

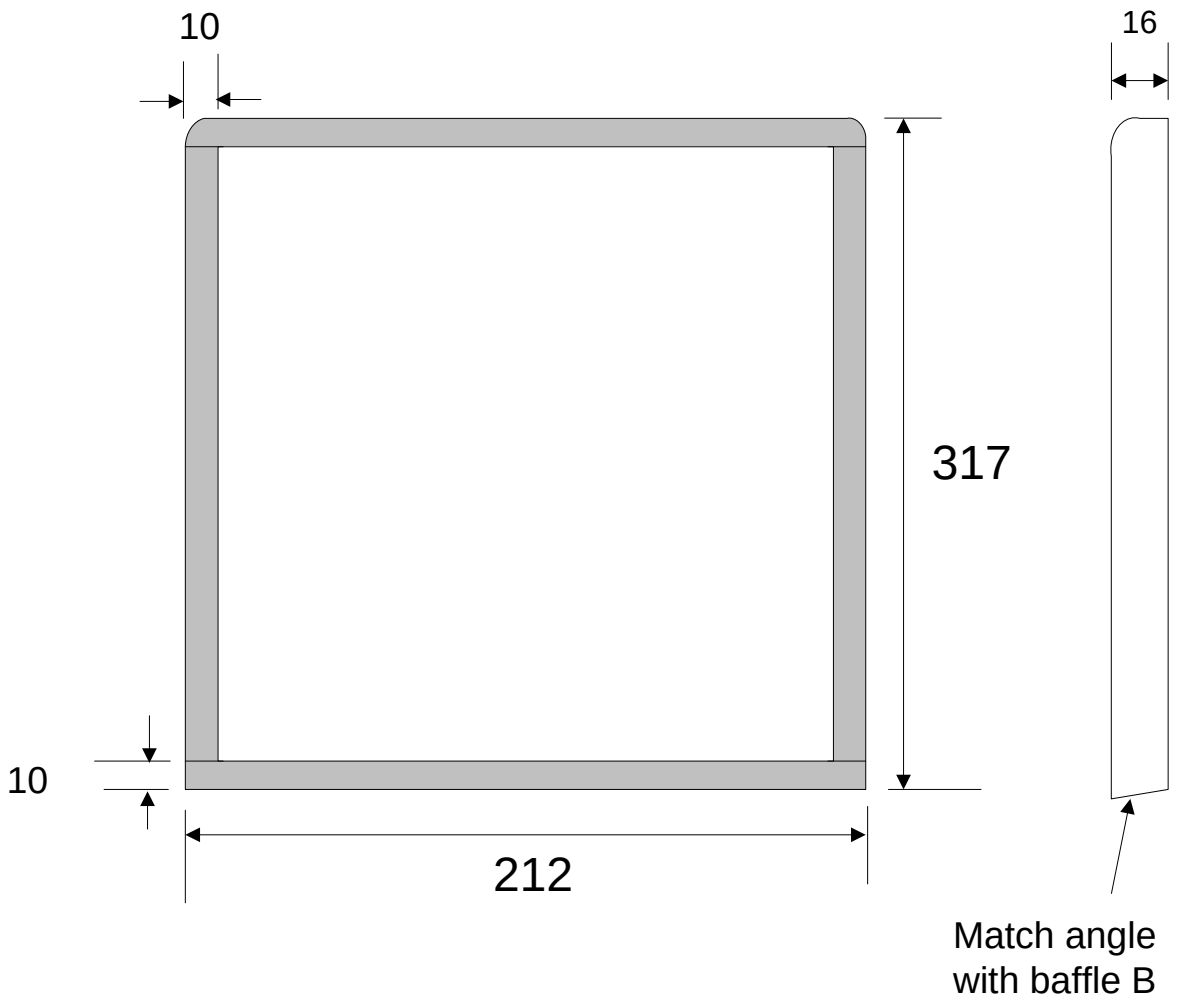

Grill

Optional

2 off

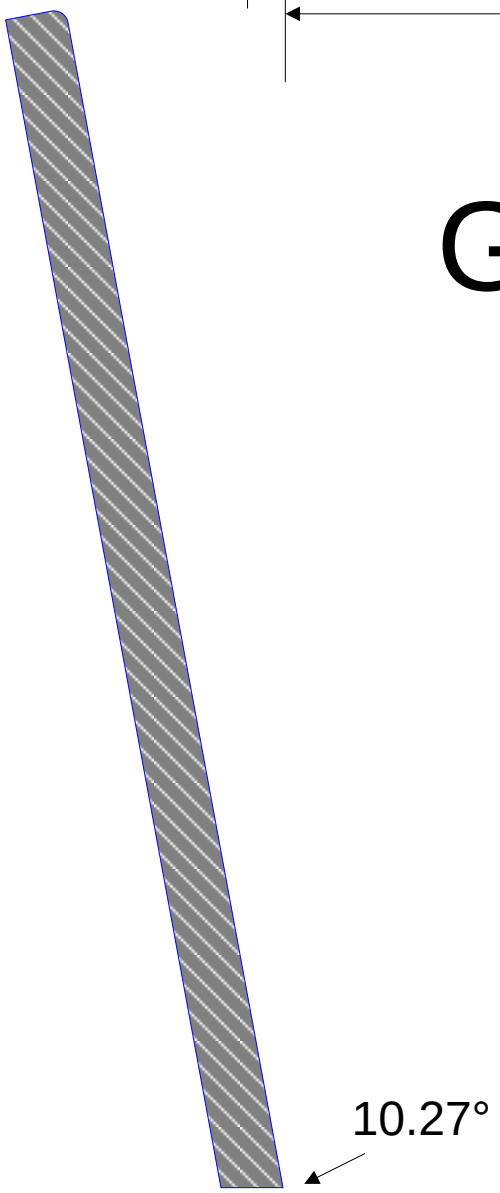

Copyright © 1998 Mike MacLeod

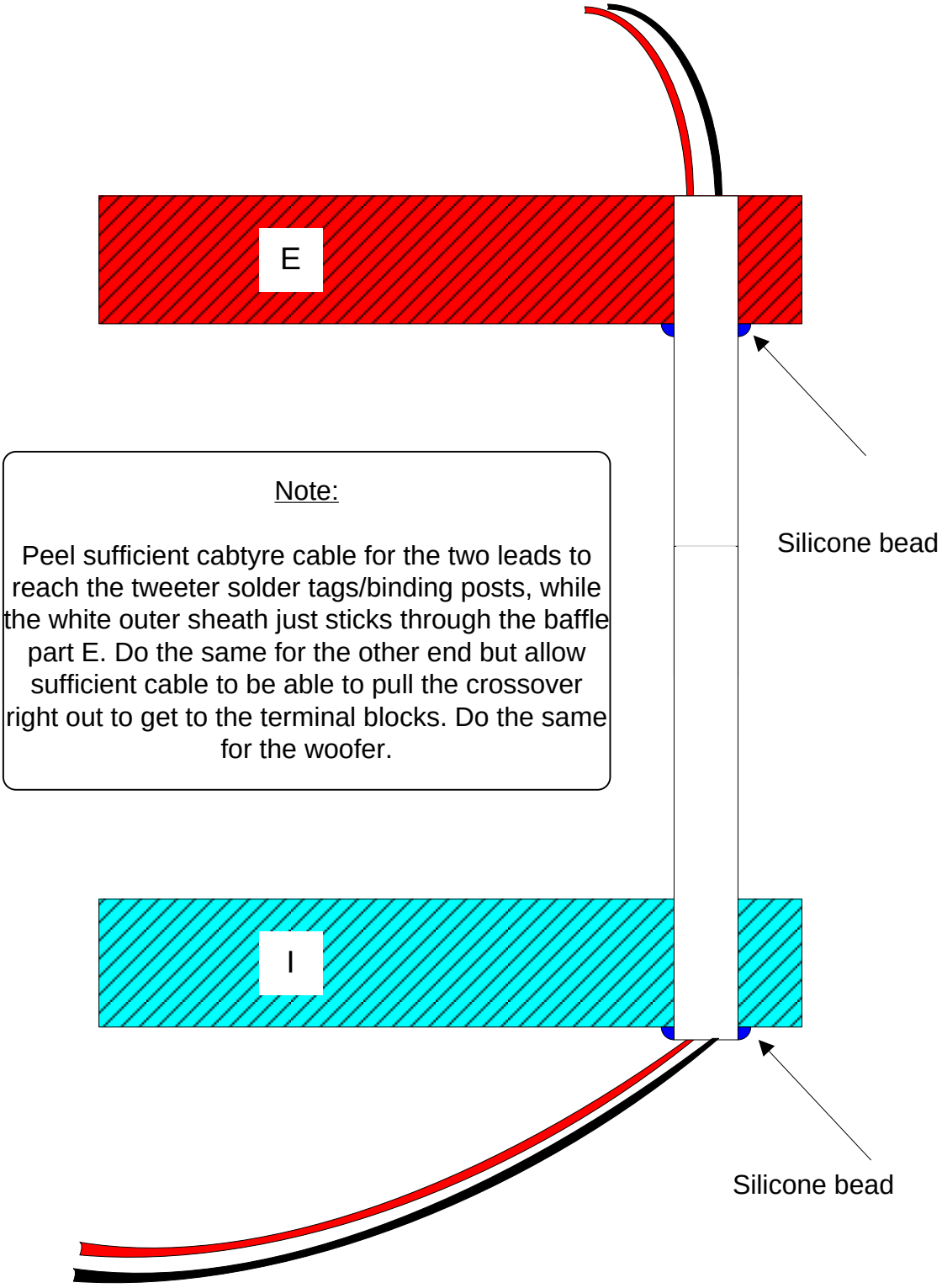

Note:

Peel sufficient cabtyre cable for the two leads to reach the tweeter solder tags/binding posts, while the white outer sheath just sticks through the baffle part E. Do the same for the other end but allow sufficient cable to be able to pull the crossover right out to get to the terminal blocks. Do the same for the woofer.

Copyright © 1998 Mike MacLeod

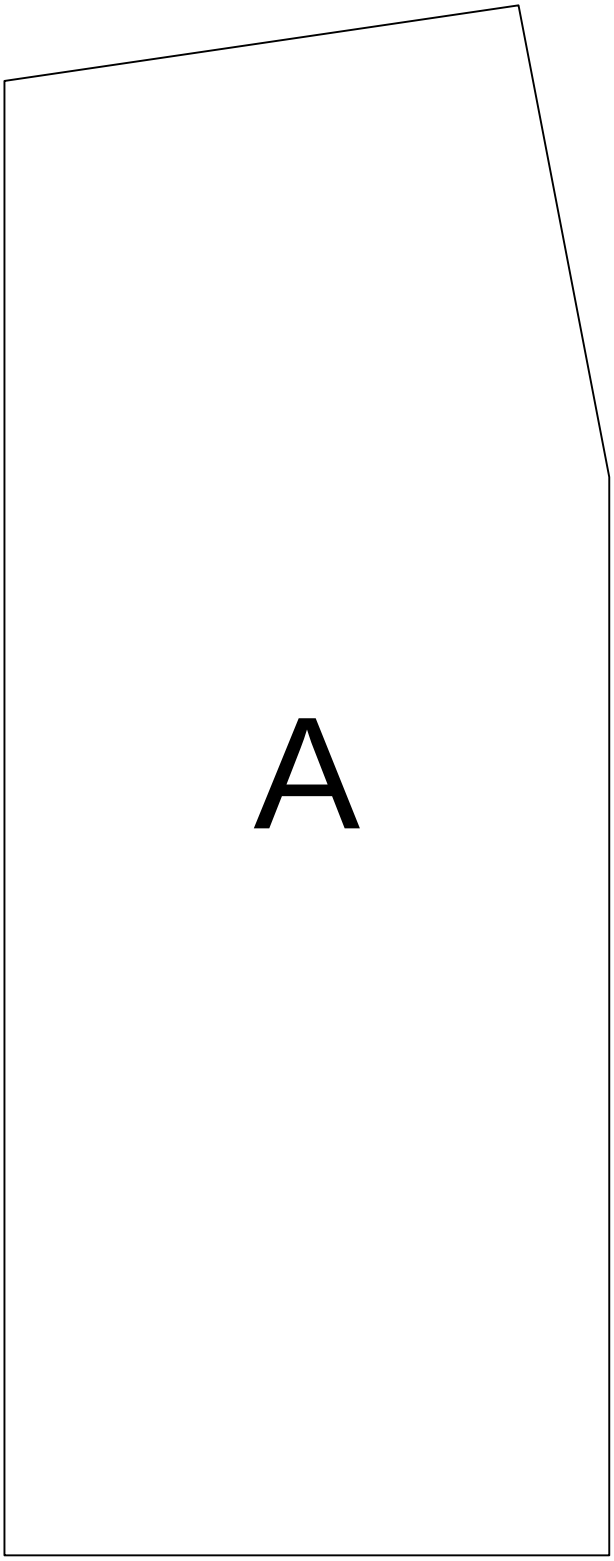
A

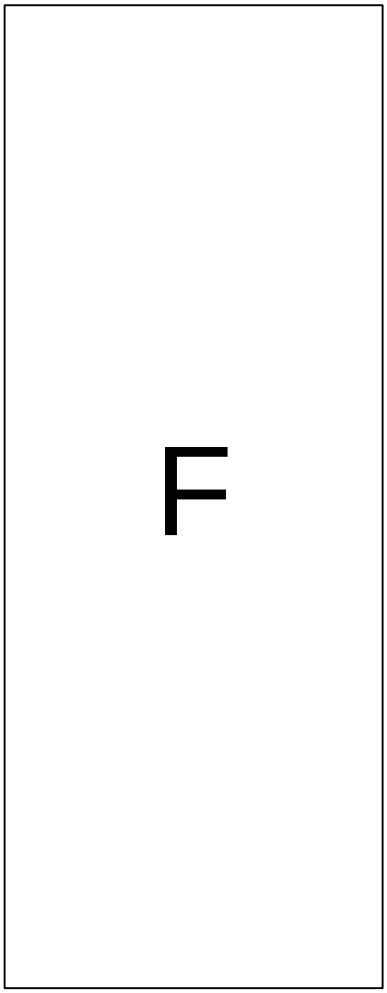
F

B

H

D

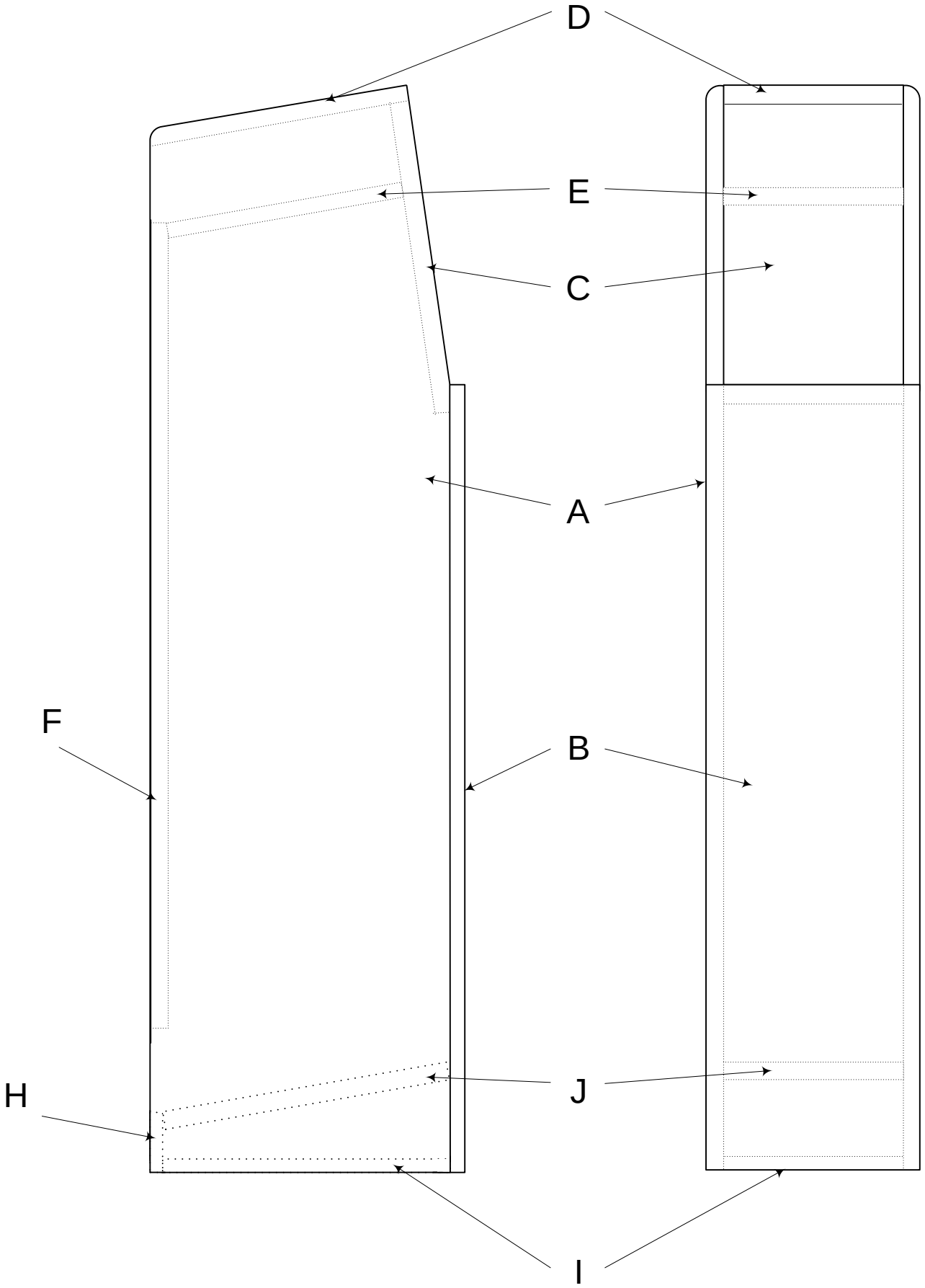

Camm Dynatone RP

Copyright Mike MacLeod 1994.

Copyright © 1998 Mike MacLeod

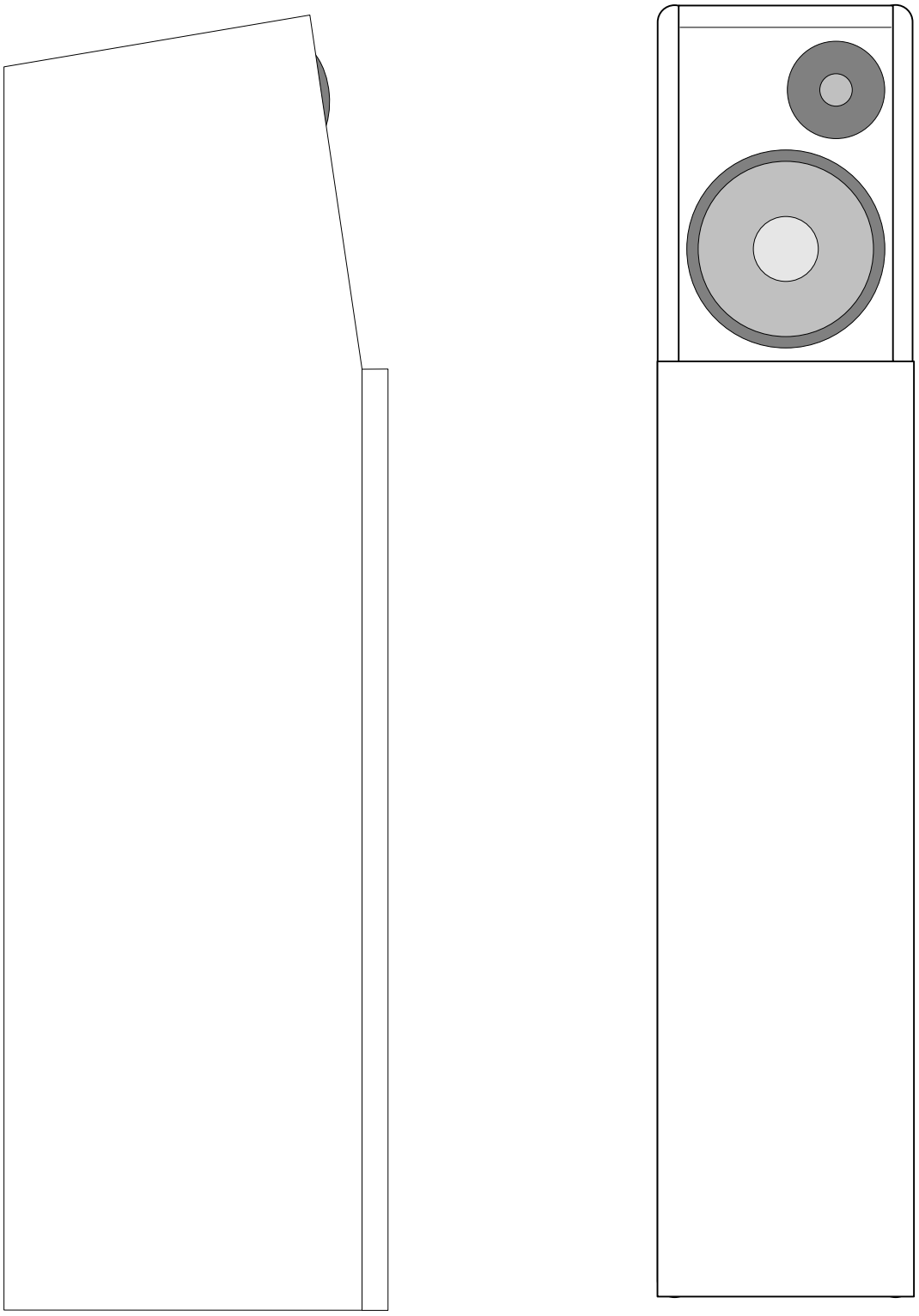

Camm Dynatone RP

Copyright Mike MacLeod 1994.

Copyright © 1998 Mike MacLeod

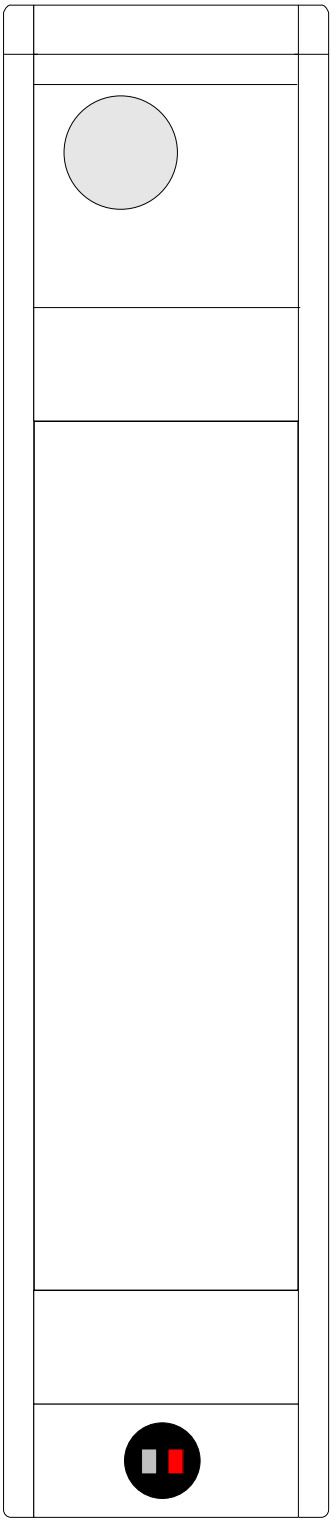

Camm Dynatone RP

Copyright Mike MacLeod 1994.

Copyright © 1998 Mike MacLeod

This is an alternative cutting plan with 7mm to be trimmed off front edge. 30-06-2008

Radius all edges

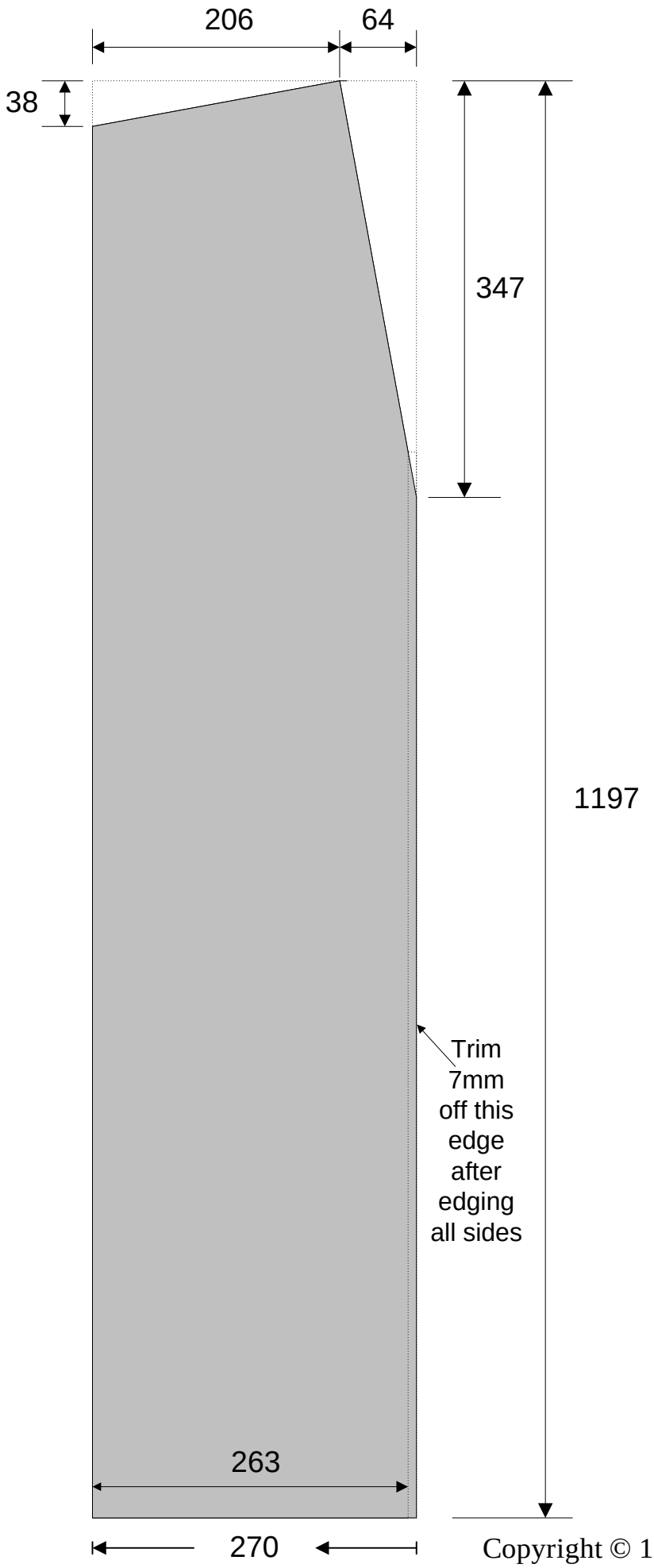

Copyright © 1998 Mike MacLeod

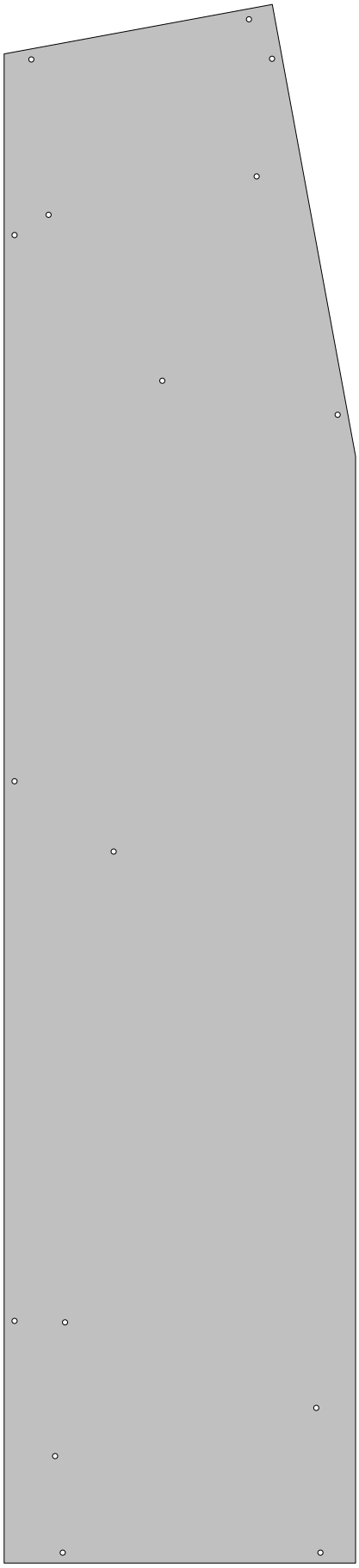

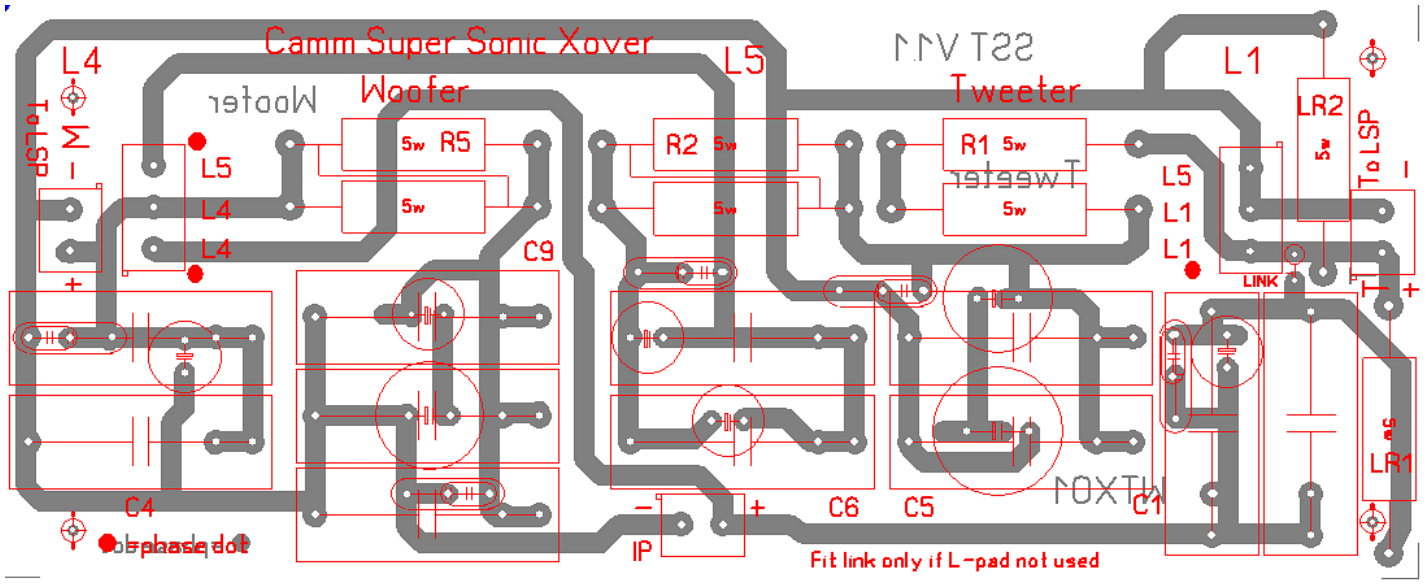
Camm Super Sonic Xover
Woofer
Tweeter
L4
L5
L1
LR2
To LSP
To SPL
R5
R2
R1
5w
C9
C4
C6
C5
C1
LR1
IP
LINK
Fit link only if L-pad not used

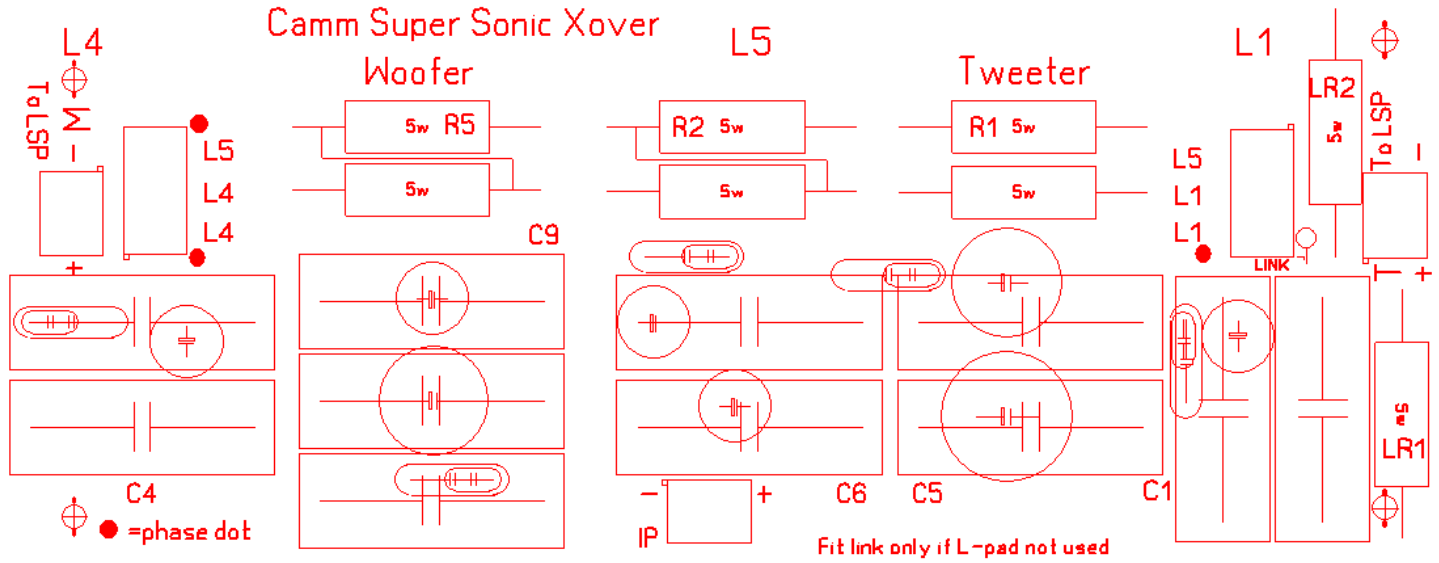
Camm Super Sonic Xover
Woofer
Tweeter
L4
To LSP
L5
L4
L4
5w R5
5w
C9
C4
=phase dot
L5
R2 5w
5w
C6
C5
IP
R1 5w
5w
L1
L5
L1
L1
LINK
C1
LR2
5w
To LSP
LR1
5w
Fit link only if L-pad not used

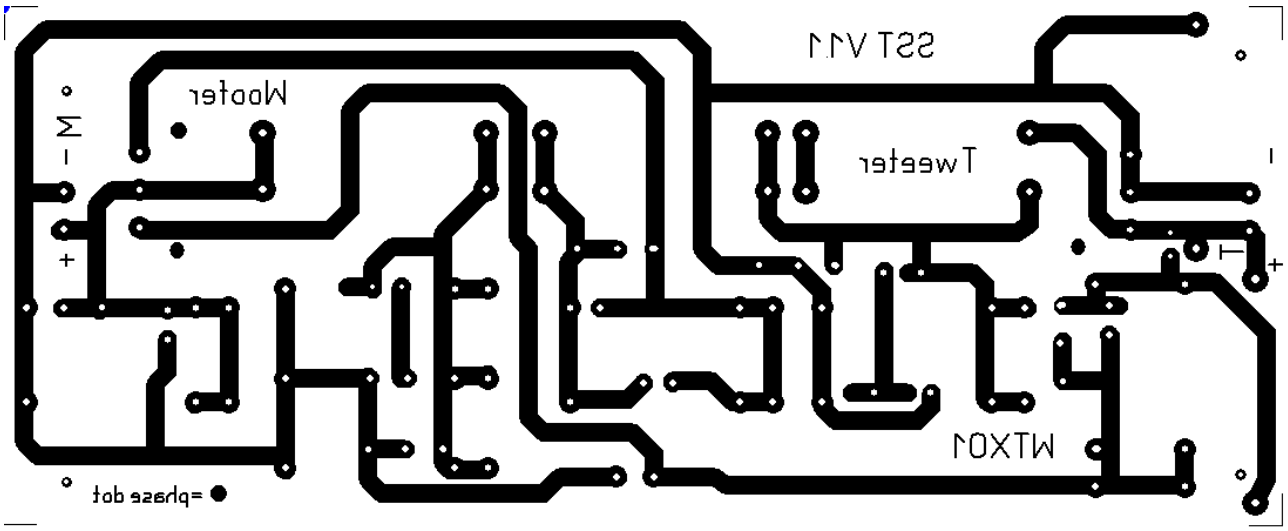
WTX01
Tweeter
SST V11
Woofer
+
−
+
−
= phase dot

Camm DynaTone Super Sonic Crossover

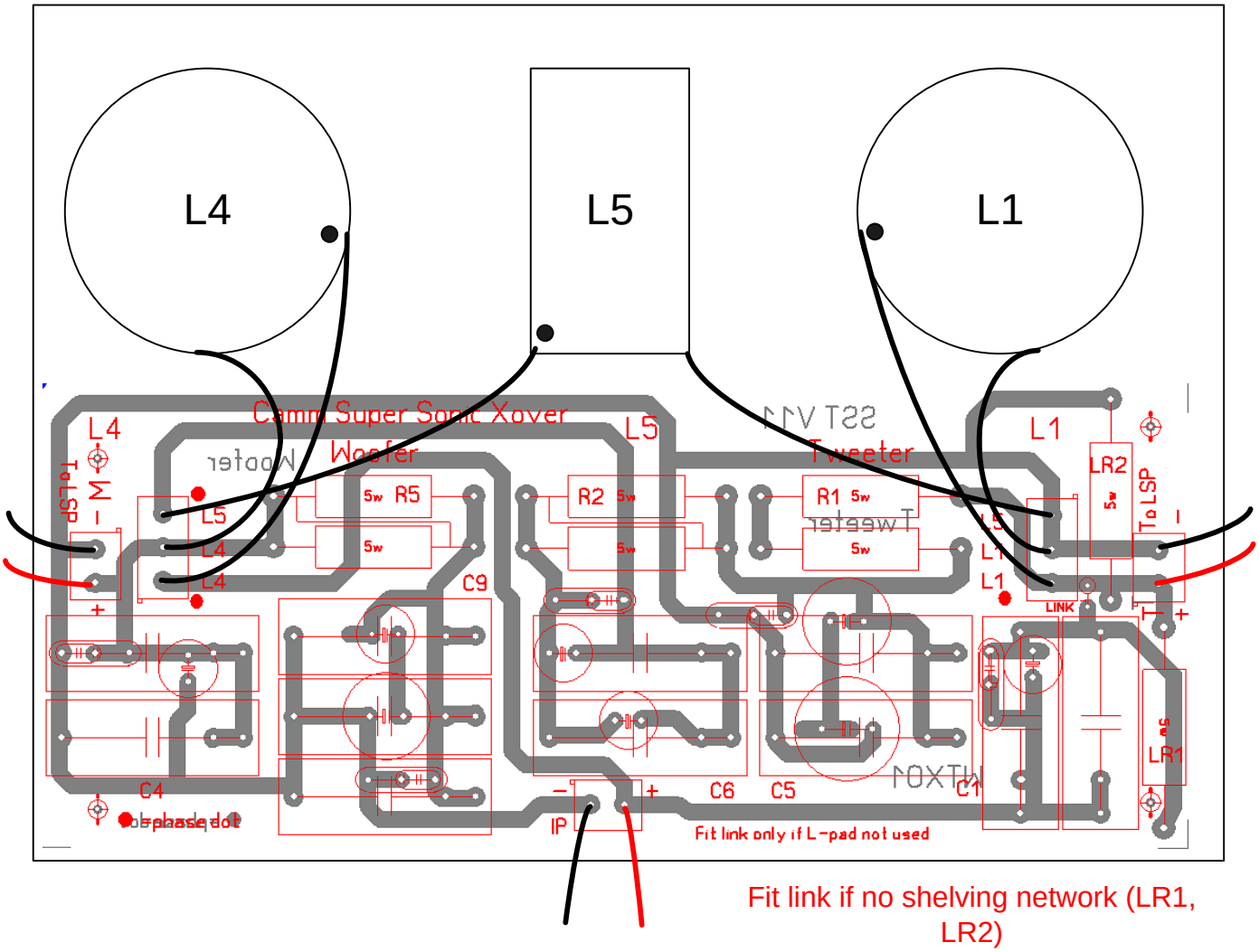

Fit link if no shelving network (LR1, LR2)

• = Phase dot
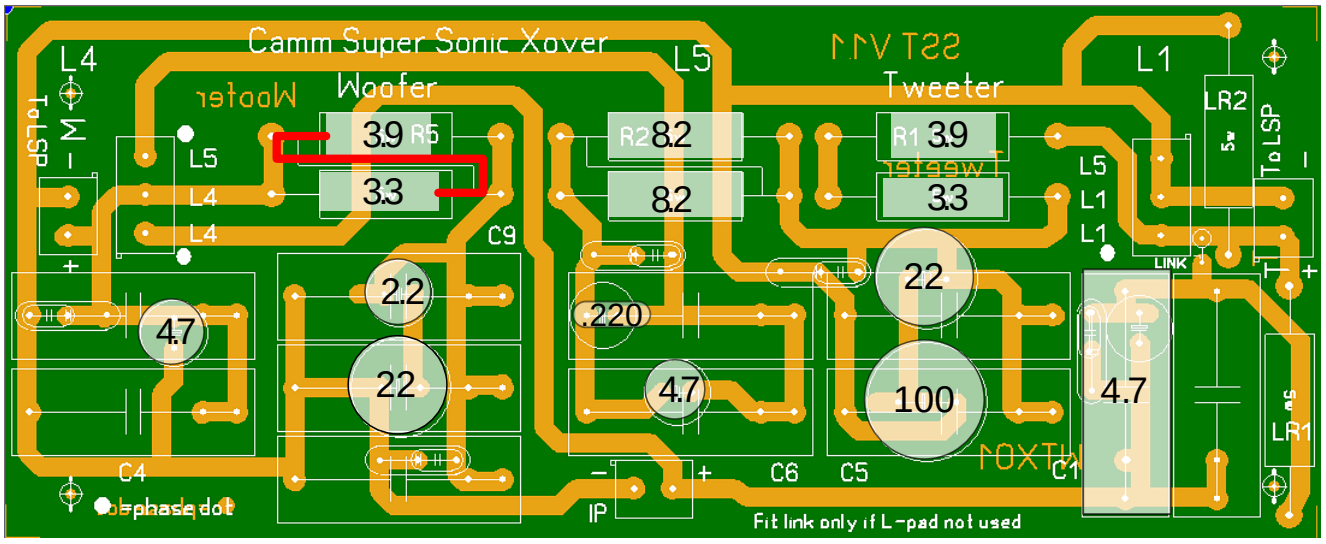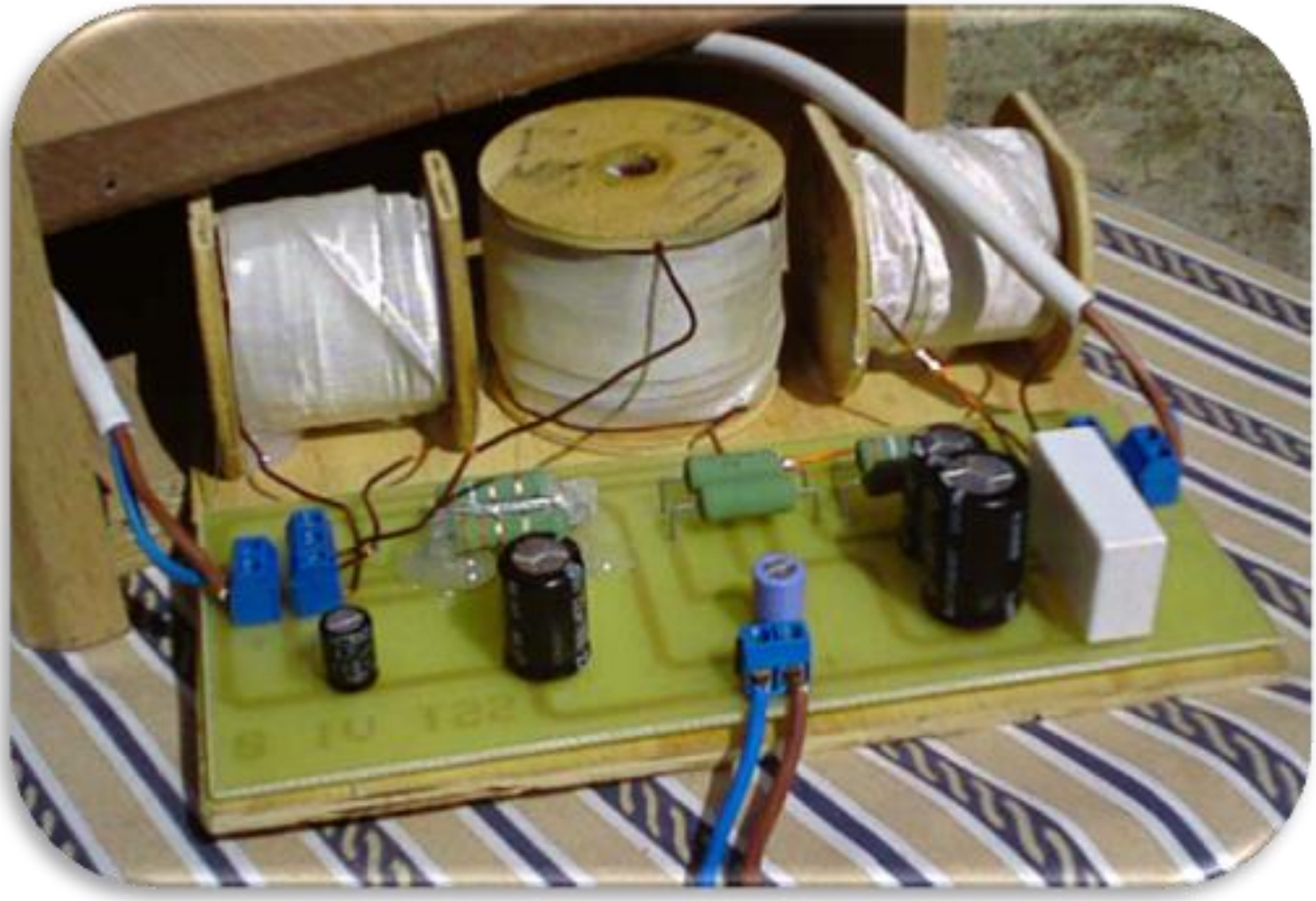
2-way